Sumitomo Drive Technologies
Always on the Move

Technical Sheet SDF2W076
Ver. 1.1

Inverter Application Manual

SF-520 → HF-620

Replacement Manual

Sumitomo Heavy Industries, Ltd.

— Table of Contents —

1. Introduction ····· 2
1. 1. Applicable Inverter Series ····· 2
1. 2. Comparison table of Model No ····· 2

2. Terminals compatibility ····· 3
2. 1. Main circuit terminals ····· 3
2. 2. Control circuit terminals ····· 5

3. Comparison of External dimensions/Installation dimensions ····· 10

4. Accessories and Options and Engineering tool for PC ····· 12
4. 1. Accessories and Options ····· 12
4. 2. Engineering tool for PC ····· 12

5. Parameter comparison list ····· 13

1． Introduction

This manual summarizes the differences and points to note when replacing the conventional SF-520 series with the HF-620 series.
Please refer to the instruction manual, technical manual, and user's guide that come with the product for details.

1． 1． Applicable Inverter Series

Applicable motor	Conventional Model	New model
Standard motor	SF-520	HF-620

1． 2． Comparison table of Model No

1． Inverter power supply: single phase 200V Class

Applicable motor capacity (kW)	Conventional Model	New Model
0.2	SF520S-A20	HF620S-A20
0.4	SF520S-A40	HF620S-A40
0.75	SF520S-A75	HF620S-A75
1.5	SF520S-1A5	HF620S-1A5

2. Inverter power supply: 3-phase 200V Class

Applicable motor capacity (kW)	Conventional Model	New Model
0.1	SF5202-A10	HF6202-A20 Note 1)
0.2	SF5202-A20	
0.4	SF5202-A40	HF6202-A40
0.75	SF5202-A75	HF6202-A75
1.5	SF5202-1A5	HF6202-1A5
2.2	SF5202-2A2	HF6202-2A2

3. Inverter power supply: 3-phase 400V Class

Applicable motor capacity (kW)	Conventional Model	New Model
0.2	SF5204-A20	HF6204-A40 Note 2)
0.4	SF5204-A40	
0.75	SF5204-A75	HF6204-A75
1.5	SF5204-1A5	HF6204-1A5
2.2	SF5204-2A2	HF6204-2A2

Note:

1）The HF-620 series does not have a "3-phase 200V class 0.1kW", so if you operate a 200V class 0.1kW motor, please select "3-phase 200V class, 0.2kW (HF6202-A20)".

2）The HF-620 series does not have a "3-phase 400V class 0.2kW", so if you operate a 400V class 0.2kW motor, please select "3-phase 400V class, 0.4kW (HF6204-A40)".

2． Terminals compatibility

This chapter explains which terminals on the SF-520 correspond to which terminals on the HF-620.

2． 1． Main circuit terminals

【Main circuit terminal symbol】-

Terminal Functions	Conventional Model SF-520 Series Terminal symbol	New Model HF-620 Series Terminal symbol
Main circuit power supply input	R/L1	R/L1
	S/L2	S/L2
	T/L3	T/L3
Drive output	U/T1	U/T1
	V/T2	V/T2
	W/T3	W/T3
Braking resistor connection terminal	B1	P/+
	B2	PR
DC reactor connection terminal	+1	P1/+1
	+2	P/+
DC power supply input	+1	P/+
	−	N/-
Ground	⏚	G (⏚)

【【Screw Size Comparison】

1． Inverter power supply: single phase 200V Class

Applicable motor capacity (kW)	Conventional Model		New Model	
0.2	SF520S-A20	Main circuit : M3.5 Ground : M3.5×2	HF620S-A20	Main circuit : M3.5 Ground : M4×2
0.4	SF520S-A40	Main circuit : M3.5 Ground : M3.5×2	HF620S-A40	Main circuit : M3.5 Ground : M4×2
0.75	SF520S-A75	Main circuit : M4 Ground : M4×2	HF620S-A75	Main circuit : M4 Ground : M4×2
1.5	SF520S-1A5	Main circuit : M4 Ground : M4×2	HF620S-1A5	Main circuit : M4 Ground : M4×2

2．Inverter power supply: 3-phase 200V Class

Applicable motor capacity (kW)	Conventional Model		New Model	
0.1	SF5202-A10	Main circuit：M3.5 Ground：M3.5×2	HF6202-A20	Main circuit：M3.5 Ground：M4×2
0.2	SF5202-A20	Main circuit：M3.5 Ground：M3.5×2		
0.4	SF5202-A40	Main circuit：M3.5 Ground：M3.5×2	HF6202-A40	Main circuit：M3.5 Ground：M4×2
0.75	SF5202-A75	Main circuit：M3.5 Ground：M3.5×2	HF6202-A75	Main circuit：M3.5 Ground：M4×2
1.5	SF5202-1A5	Main circuit：M4 Ground：M4×2	HF6202-1A5	Main circuit：M4 Ground：M4×2
2.2	SF5202-2A2	Main circuit：M4 Ground：M4×2	HF6202-2A2	Main circuit：M4 Ground：M4×2

3．Inverter power supply: 3-phase 400V Class

Applicable motor capacity (kW)	Conventional Model		New Model	
0.2	SF5204-A20	Main circuit：M4 Ground：M4×2	HF6204-A40	Main circuit：M4 Ground：M4×2
0.4	SF5204-A40	Main circuit：M4 Ground：M4×2		
0.75	SF5204-A75	Main circuit：M4 Ground：M4×2	HF6204-A75	Main circuit：M4 Ground：M4×2
1.5	SF5204-1A5	Main circuit：M4 Ground：M4×2	HF6204-1A5	Main circuit：M4 Ground：M4×2
2.2	SF5204-2A2	Main circuit：M4 Ground：M4×2	HF6204-2A2	Main circuit：M4 Ground：M4×2

2．2．Control circuit terminals

【Control circuit terminal symbol and functions】

Functions	SF-520 Series		HF-620 Series	
	Symbol	Name（Default setting）	Symbol	Name（Default setting）
Multi-Function Digital Inputs	S1	Multi-function input 1 (Closed: Forward run, Open: Stop)	FR	Multi-function input [FR] (Closed: Forward run, Open: Stop)
	S2	Multi-function input 2 (Closed: Reverse run, Open: Stop)	RR	Multi-function input [RR] (Closed: Reverse run, Open: Stop)
	S3	Multi-function input 3 (External fault (N.O.))	ES	Multi-function input [ES] (External fault (N.O.))
	S4	Multi-function input 4 (Fault reset)	RST	Multi-function input [RST] (Fault reset)
	S5	Multi-function input 5 (Multi-step speed reference 1)	DFL	Multi-function input [DFL] (Multi-step speed reference 1)
	SC	Multi-function input common (Control common)	COM	Common for input/output signal
Main Frequency Reference Input	+V	Analog input power supply	+V	Power supply for frequency reference
	A1	Multi-function analog input 1 (frequency reference)	VRF	Analog input 1 (Voltage/Current)
	AC	Frequency reference common	COM	Common for input/output signal
Multi-Function Digital Output	MA	N.O. (fault)	MA	N.O. (fault)
	MB	N.C. output (fault)	MB	N.C. output (fault)
	MC	Digital output common	MC	Digital output common
Monitor Output	AM	Analog monitor output (Output frequency)	AMV Note 1)	Analog voltage output or Pulse output
	AC	Monitor common	COM	Common for input/output signal
RS485 Communication Note 2) Note 3)	R+	Communications input (+)	SP	Communications input/output (+)
	R-	Communications input (-)	SN	Communications input/output (-)
	S+	Communications output (+)	SP	Communications input/output (+)
	S-	Communications output (-)	SN	Communications input/output (-)
	IG	Shield ground	COM	Shield ground

1) Analog voltage output (0-10V DC)/current output (0,4 to 20 mA) can be switched with [Cd-26].

2) This is a comparison when the option unit SI-485/J-H is installed on the SF-520.

3) Refer to the user's guide "Chapter 11 Modbus Communication" for the RS485 communication connection method of the HF-620.

【SF-520 Series Standard Connection Diagram】

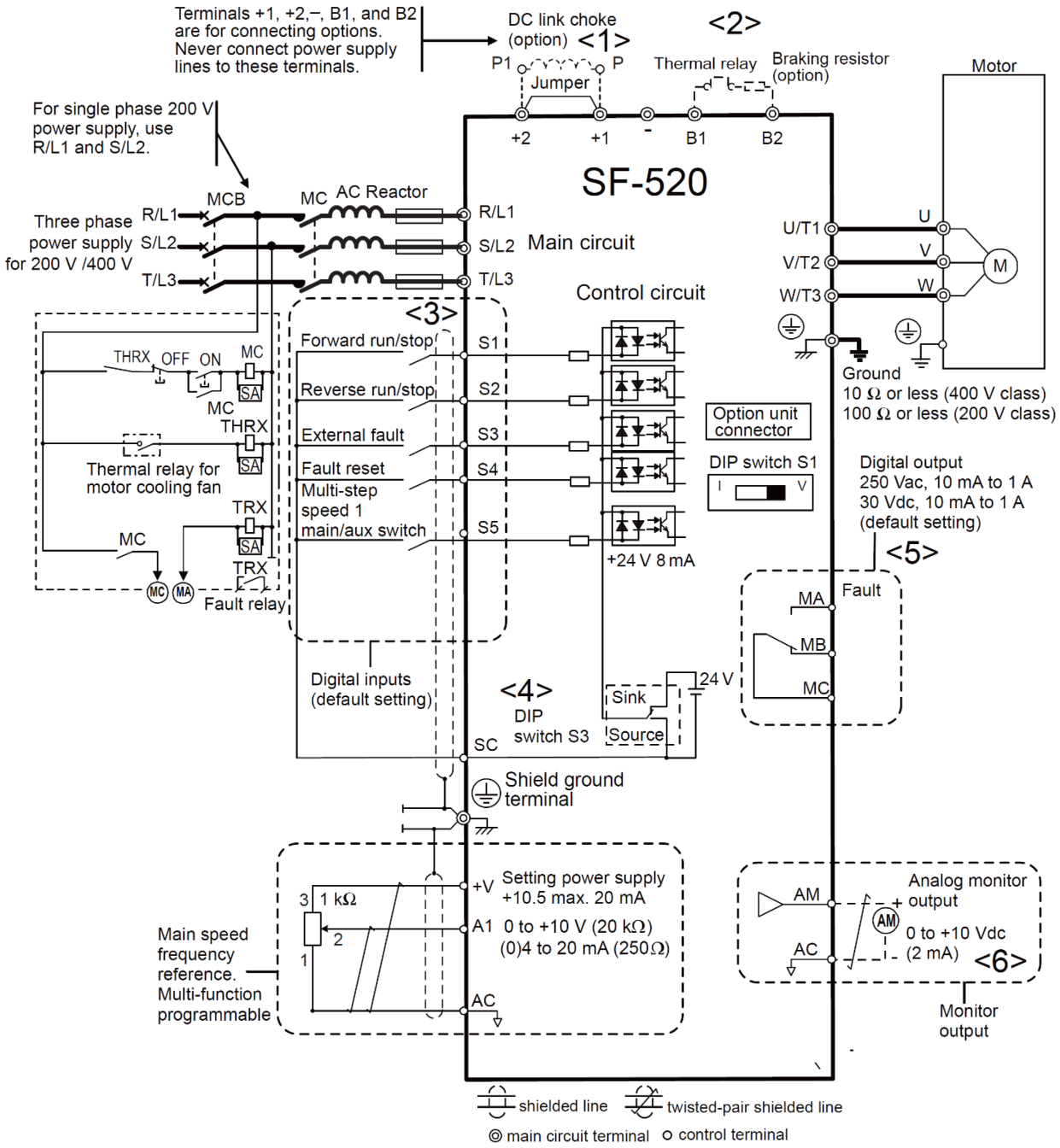

<1> : Remove the jumper when installing an optional DC reactor.
<2> : The MC on the input side of the main circuit should open when the thermal relay is triggered.
<3> : Connected using sequence input signal (S1 to S5) from NPN transistor; Default: sink mode (0 V com).
<4> : Use only a +24 V internal power supply in sinking mode; the source mode requires an external power supply.
<5> : Minimum load: 5 Vdc, 10 mA (reference value).
<6> : Monitor outputs work with devices such as analog frequency meters, ammeters, voltmeters and watt meters ; they are not intended for use as a feedback-type of signal.

【HF-620 Series Standard Connection Diagram】

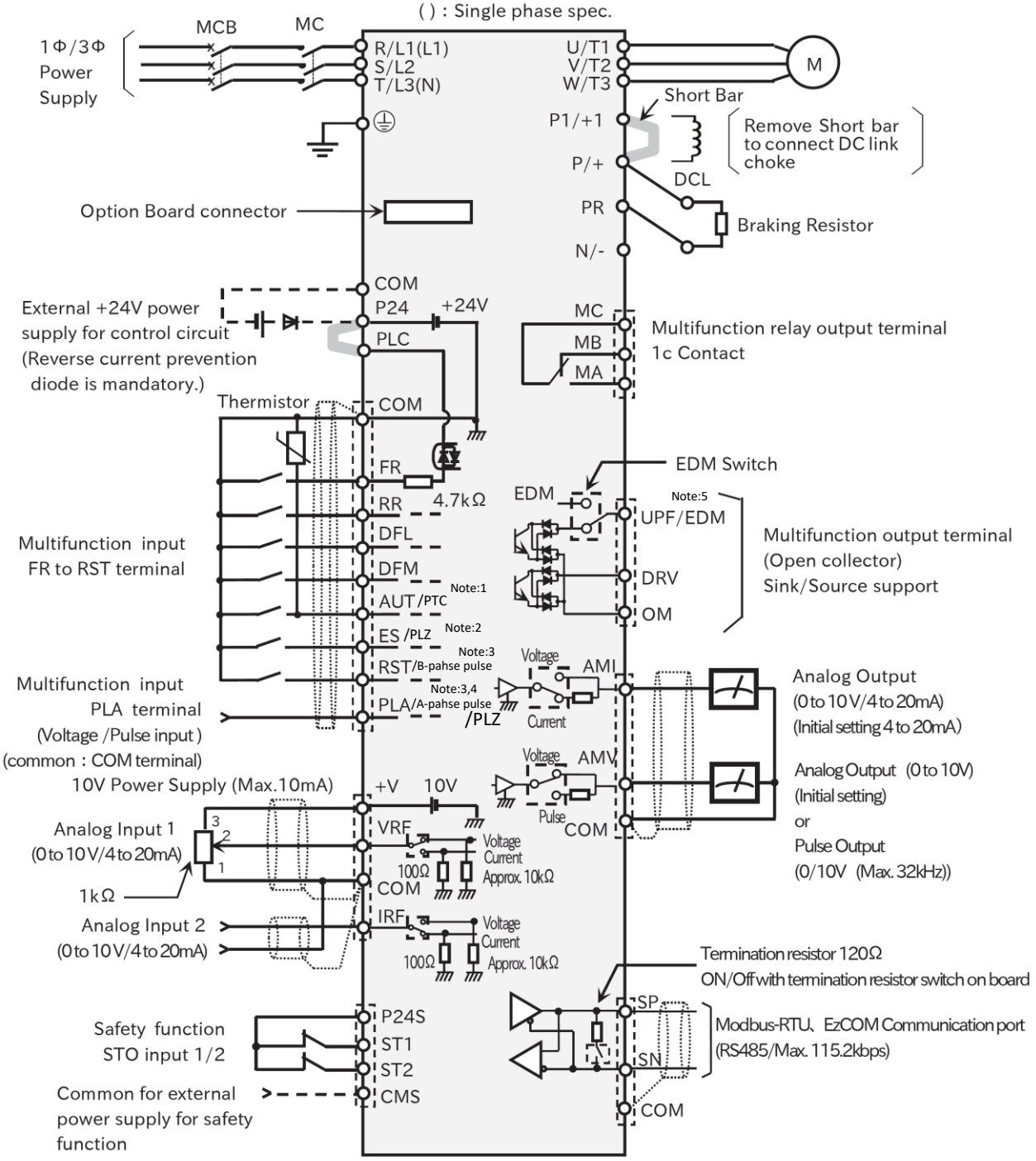

Note:

1.When "PTC (resistance) enable (01)" is selected for "Thermistor selection [Cb-40]," input terminal [AUT] becomes the terminal for connecting an external thermistor (PTC).

2. When using the "Pulse input Z [PLZ]" input terminal, assign it to input terminal [ES].

3. When anything other than "Disable (00)" is selected for "Pulse input detection target selection [CA-90]," the input terminal [RST] is automatically switched to the terminal for phase-B pulse input or directional signals, and the input terminal [PLA] to the terminal for phase-A pulse input or single-phase pulse input.

4. The electrical specifications of input terminal [PLA] are different from those of other input terminals [FR] to [RST].

5. When the EDM switch on the board is turned ON, output terminal [UPF] switches to "STO state monitor [EDM]". When the switch is turned back to OFF, output terminal [UPF] becomes "Not use [no]".

【Change of control terminal block specifications】

The control terminal block changes from a rod terminal block screw type to a rod terminal block spring clamp type.

SF-520 Series Screw type terminal	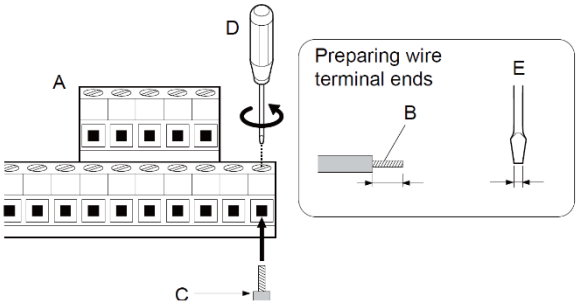 A – Control terminal block B – Avoid fraying wire strands when stripping insulation from wire. Strip length 5.5 mm. C – Single wire or stranded wire D – Loosen screw to insert wire. E – Blade depth of 0.4 mm or less Blade width of 2.5 mm or less
HF-620 Series Spring clamp type terminal	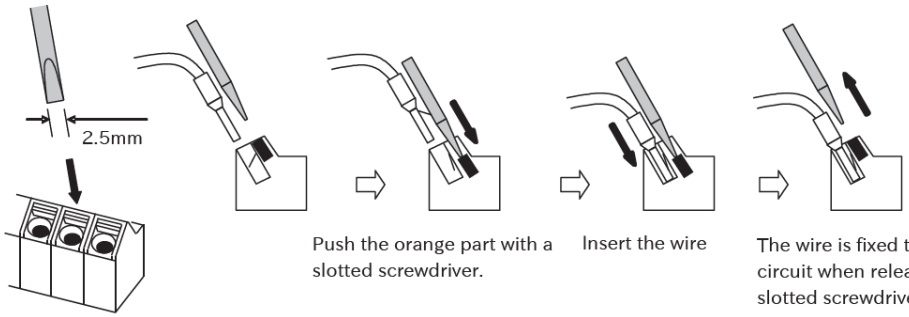 Push the orange part with a slotted screwdriver. Insert the wire The wire is fixed to the circuit when release the slotted screwdriver.

Recommended terminal

・SF-520 Series

Wire size mm2 (AWG)	Ferrule model Note 1)	L1 [mm]	L2 [mm]	φd [mm]	φD [mm]
0.25(24)	AI 0.25–6YE	6	10.5	0.8	2
0.34(22)	AI 0.34–6TQ	6	10.5	0.8	2
0.5(20)	AI 0.5–6WH	6	14	1.1	2.5
0.75(18)	AI 0.75-6GY	6	12	1.3	2.8
1.0	AI 1-6RD	6	12	1.5	3.0

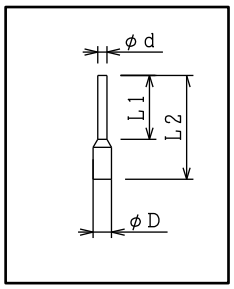

・HF-620 Series

Wire size mm2 (AWG)	Ferrule model Note 1)	L1 [mm]	L2 [mm]	φd [mm]	φD [mm]
0.25(24)	AI 0,25-8YE	8	12.5	0.8	2
0.34(22)	AI 0,34-8TQ	8	12.5	0.8	2
0.5(20)	AI 0,5-8WH	8	14	1.1	2.5
0.75(18)	AI 0,75-8GY	8	14	1.3	2.8

Note:

1) Manufacturer: Phoenix Contact GmbH & Co. KG

【The method of switching between sink and source modes】

The method of switching between sink and source modes in input signal theory has changed.

SF-520 Series Factory setting: Sink mode	To switch between sink mode and source mode, use DIP switch S3 on the front of the inverter. 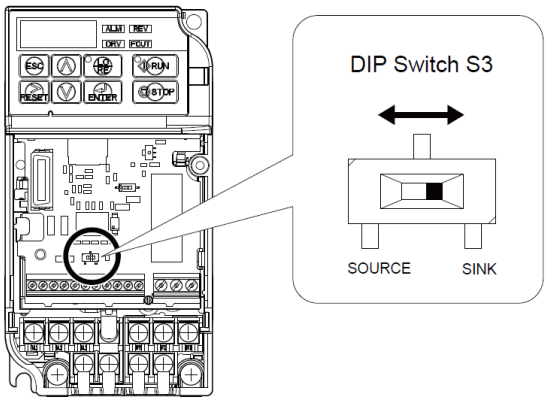
HF-620 Series Factory setting: Sink mode	To switch between sink mode and source mode, remove the shorting wire between [P24] and [PCS] terminals on the control circuit terminal block, and connect it between the [PCS] and [COM] terminals. 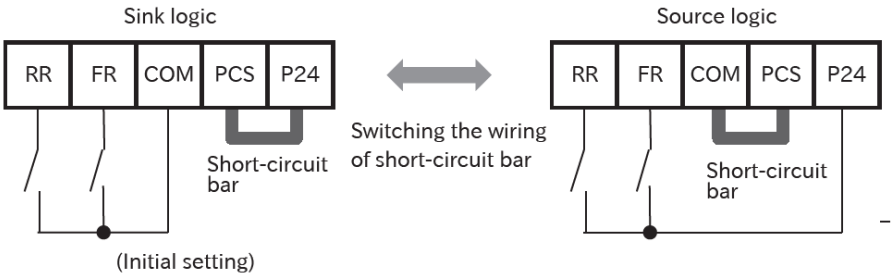

3． Comparison of External dimensions/Installation dimensions

Changed dimensions are written in bold red.

1． Inverter power supply: single phase 200V Class

Motor capacity : 0.2kW	External dimensions			Installation dimensions		Fig
Model No	W	H	D	W 1	H 1	
SF520S-A20	68	128	76	56	118	A1
HF620S-A20	68	128	**109**	56	118	A2

Motor capacity : 0.4kW	External dimensions			Installation dimensions		Fig
Model No	W	H	D	W 1	H 1	
SF520S-A40	68	128	118	56	118	A1
HF620S-A40	68	128	**122.5**	56	118	A2

Motor capacity : 0.75kW	External dimensions			Installation dimensions		Fig
Model No	W	H	D	W 1	H 1	
SF520S-A75	108	128	137.5	96	118	B1
HF620S-A75	108	128	**170.5**	96	118	B2

Motor capacity : 1.5kW	External dimensions			Installation dimensions		Fig
Model No	W	H	D	W 1	H 1	
SF520S-1A5	108	128	154	96	118	B1
HF620S-1A5	108	128	**170.5**	96	118	B2

2． Inverter power supply: 3-phase 200V Class

Motor capacity : 0.1kW	External dimensions			Installation dimensions		Fig
Model No	W	H	D	W 1	H 1	
SF5202-A10	68	128	76	56	118	A1
HF6202-A20	68	128	**109**	56	118	A2

Motor capacity : 0.2kW	External dimensions			Installation dimensions		Fig
Model No	W	H	D	W 1	H 1	
SF5202-A20	68	128	76	56	118	A1
HF6202-A20	68	128	**109**	56	118	A2

Motor capacity : 0.4kW	External dimensions			Installation dimensions		Fig
Model No	W	H	D	W 1	H 1	
SF5202-A40	68	128	108	56	118	A1
HF6202-A40	68	128	**122.5**	56	118	A2

Motor capacity : 0.75kW	External dimensions			Installation dimensions		Fig
Model No	W	H	D	W 1	H 1	
SF5202-A75	68	128	128	56	118	A1
HF6202-A75	68	128	**145.5**	56	118	A2

Motor capacity : 1.5kW	External dimensions			Installation dimensions		Fig
Model No	W	H	D	W 1	H 1	
SF5202-1A5	108	128	129	96	118	B1
HF6202-1A5	108	128	**170.5**	96	118	B2

Motor capacity : 2.2kW	External dimensions			Installation dimensions		Fig
Model No	W	H	D	W 1	H 1	
SF5202-2A2	108	128	137.5	96	118	B1
HF6202-2A2	108	128	**170.5**	96	118	B2

3． Inverter power supply: 3-phase 400V Class

Motor capacity：0.2kW	External dimensions			Installation dimensions		Fig
Model No	W	H	D	W 1	H 1	
SF5204-A20	108	128	81	96	118	B1
HF6204-A40	108	128	143.5	96	118	B2

Motor capacity：0.4kW	External dimensions			Installation dimensions		Fig
Model No	W	H	D	W 1	H 1	
SF5204-A40	108	128	99	96	118	B1
HF6204-A40	108	128	143.5	96	118	B2

Motor capacity：0.75kW	External dimensions			Installation dimensions		Fig
Model No	W	H	D	W 1	H 1	
SF5204-A75	108	128	137.5	96	118	B1
HF6204-A75	108	128	170.5	96	118	B2

Motor capacity：1.5kW	External dimensions			Installation dimensions		Fig
Model No	W	H	D	W 1	H 1	
SF5204-1A5	108	128	154	96	118	B1
HF6204-1A5	108	128	170.5	96	118	B2

Motor capacity：2.2kW	External dimensions			Installation dimensions		Fig
Model No	W	H	D	W 1	H 1	
SF5204-2A2	108	128	154	96	118	B1
HF6204-2A2	108	128	170.5	96	118	B2

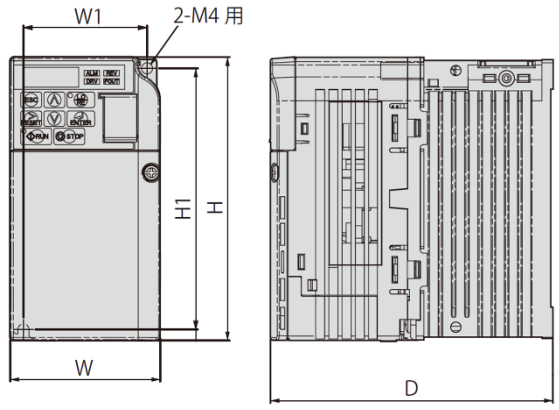

Fig.A1

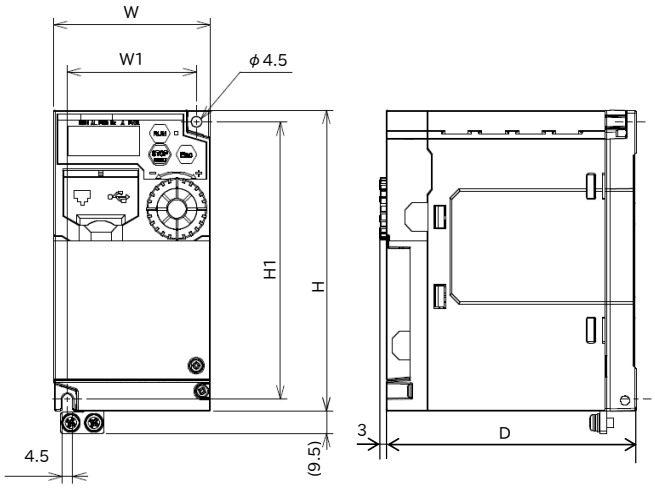

Fig.A2

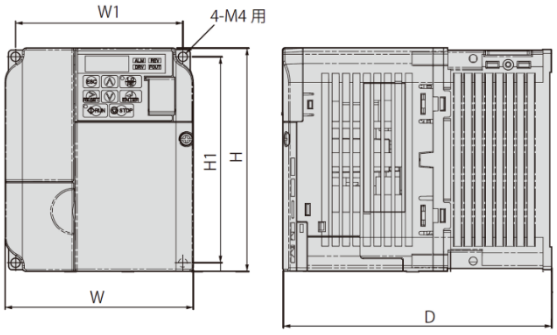

Fig.B1

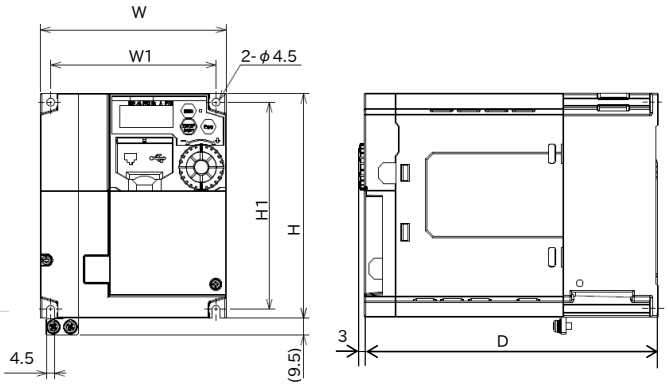

Fig.B2

4． Accessories and Options and Engineering tool for PC

4． 1． Accessories and Options

SF-520 Series Accessories and Options	Used in combination with HF-620	Replacement
Frequency Reference Setting Unit：VR07	OK	
Speed Meter：DCF-12N	OK	
AC Ammeter：ACF-12NB	OK	
Remote operator：JVOP-182-H	NG	OS-44 Note1)
Cable for Remote operator：ICS-1,ICS-3	OK	
Frequency Setting Potentiometer Unit：AI-V3\J-H	NG	
RS-232C Interface Unit：SI-232/JC-H Note2)	NG	
RS-422/485 Interface Unit for MEMOBUS Communication：SI-485/J-H Note3)	NG	
AC Reactor (Input side)	OK	
AC Reactor (Output side)	OK	
DC Reactor	OK	
Noise Filter (Input side)	OK	
Noise Filter (Output side)	OK	
Zero-phase Reactor	OK	
XY filter	OK	
Regenerative Braking Resistor Note4)	OK	
Cable for Engineering Tool：WV103	NG	USB Cable Note5)

Note：

1) Can be used with ver2.0 or later.

2) This is an option to install when using the LED operator and PC communication software (SDWP001) on the SF-520. The HF-620 can be connected to OS-44 (LCD operator) and PC communication software (SAFS001) as standard.

3) This is an option to be installed on SF-520 when performing MEMOBUS/Modbus communication. HF-620 supports Modbus communication as standard.

4) Please check the minimum resistance value (Ω) of the braking resistor that can be connected to the HF-620 in "2. Product Specifications" of the Basic Guide or "17.1 Standard Specifications" of the User's Guide.

5) Inverter side USB connector: Micro-B type
Recommended product cable: U2C-AMBF2U12WH (manufactured by ELECOM Co., Ltd.)

4． 2． Engineering tool for PC

The engineering tool for PC has been changed for the new model HF-620 series.

SF-520 Series：SDWP001
HF-620 Series：SAFS001(ver3)

It can be downloaded from the website.
https://japan.sumitomodrive.com/en-jp

５． Parameter comparison list

Please refer to the Appendix (1) for the parameter comparison table between the conventional model SF-520 series and the new model HF-620 series.

Revision history

Ver	Contents	Date
1.0	Create a new entry	2024/4/12
1.1	「１． ２． Comparison table of Model No」 2. Inverter power supply: 3-phase 200V Class HF620S-A20→HF6202-A20	2024/5/7