Sumitomo Drive Technologies

PREST® NEO Gearmotor

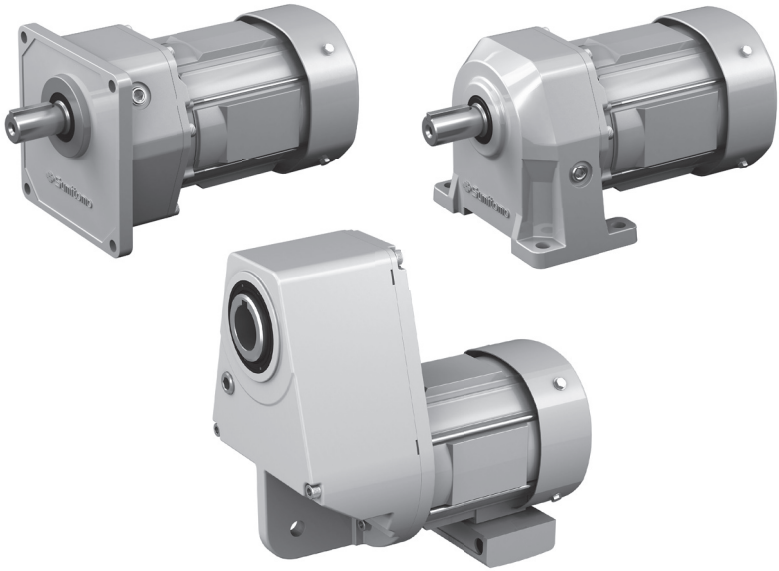

<<CAUTION>>

- The product should be handled by an experienced and skilled personnel.
  Read the maintenance manual thoroughly before using the product.
- The maintenance manual should be delivered to a customer who uses the product.
- Make sure the maintenance manual should be stored securely.

Sumitomo Heavy Industries, Ltd. Maintenance manual No.ZM2302E-10

Introduction: Safety Precautions

- Carefully read this maintenance manual and all accompanying documents before use (installation, operation, maintenance, inspection, etc.). Thoroughly understand the machine, information about safety, and all precautions for correct operation.
  After reading, retain this manual for future reference.
- Pay close attention to the "DANGER" and "CAUTION" warnings regarding safety and proper use.

⚠ DANGER Improper handling may result in physical damage, serious personal injury and / or death.

⚠ CAUTION Improper handling may result in physical damage and/ or personal injury.

Matters described in ⚠ CAUTION may lead to serious danger depending on the situation.
Be sure to observe important matters described herein.

⚠ DANGER

- Transport, installation, plumbing, wiring, operation, maintenance, and inspections should be performed by trained technicians; otherwise, electric shock, injury, fire, or damage to the equipment may result.
- In the case of maintenance with disassembly, please contact the nearest authorized service station.
- When using the equipment in conjunction with explosion proof motor, a technician with electrical expertise should supervise the transport, installation, plumbing, wiring, operation, maintenance and inspection of the equipment, otherwise, explosion, ignition, electric shock, or damage to the equipment may result.
- When the unit is to be used in a system for human transport a protecting device for human safety should be installed to prevent chances of accidents resulting in personal injury, death, or damage to the equipment due to running out of control or falling.
- When the unit is to be used for an elevator or lifter, install a safety protecting device on the elevator side to prevent it from falling; otherwise, personal injury, death, or damage to the equipment may result.

⚠ CAUTION

Please install loss prevention device such as oil pan to the machine which is vulnerable to oil especially (machine for food processing and machine for clean room, and so on) in case oil or grease leaks; otherwise, the product may fail because of oil leakage.

This maintenance manual is common in "gearmotor without brake" and "gearmotor with brake".

The symbols shown below appear in the upper right or left corner of each page to indicate the classification. Please read the applicable pages.
On Common pages, symbols identify distinctions between specific specifications.

Specifications	All Specifications Are Common	Gearmotor	
		Without brake	With brake
Symbol	Common		B

Contents

Introduction: Safety Precautions 1
Introduction: How to Refer to the Maintenance Manual, Table of Contents 2
1. Inspection Upon Delivery 3
2. Storage 7
3. Transport 8
4. Installation 9
5. Coupling with Other Machines 11
6. Wiring 16
7. Operation 35
8. Daily Inspection and Maintenance 38
9. Troubleshooting 56
10. Construction Drawings 58
11. Warranty 61

⚠ CAUTION

- Unpack the unit after verifying that it is positioned right side up; otherwise, injury may result.
- Verify that the unit received is in fact the one you ordered. Installing the wrong unit may result in personal injury or equipment damage.
- Do not remove the nameplate.

Verify the items listed below upon receiving the product. If a nonconformity or problem is found, please contact with your nearest agent, distributor, or sales office.

[1] Does the information on the nameplate conform to what you ordered?

[2] Was any part broken during transport?

[3] Are all bolts and nuts tightened firmly?

1-1 Reading the Nameplates

There are two main types of nameplates: type 1 and type 2. Representative examples are shown below. Please observe them by type.

When contacting the company, please provide [1] Gearmotor type/specification symbol, [2] Reduction ratio, and [3] Serial number.

- Nameplate Type 1: Gear Unit and Motor Unit Are Combined.

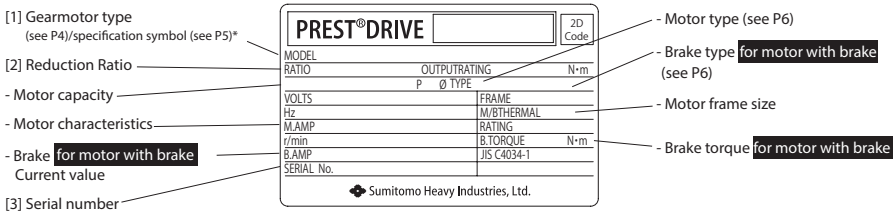

Figure 1-1 Gearmotor nameplate (type 1)

- Nameplate Type 2: Separate Nameplates for Gear Unit and Motor Unit.

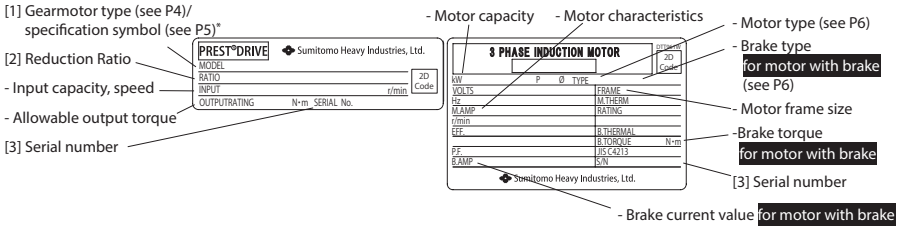

(Gear unit nameplate) (Motor unit nameplate)

Figure 1-2 Gearmotor nameplate (type 2)

* A specification symbol may not be identified.

1-2 Lubrication Method

All series of Prest NEO Gearmotor adopt grease lubrication so that grease is enclosed when shipped from the factory, the motor is available out of the box.

1-3 Gearmotor Type

Symbol meanings are shown below. Please confirm that the type matches the order.

Z N H M 01 – 1180 – ☐ – B – 30

Reduction ratio

With or Without Brake	
Blank	Without Brake
B	With brake
C	One-Touch Release With brake

Mounting style	
H	Foot
F	Flange
Y	Hollow shaft

Output Shaft Direction	
N	Universal mounting
H	Horizontal, Output shaft level

Symbol	Suffix (motor type)
Blank	With 3-phase motor
EP	With Premium-Efficiency, 3-Phase Motor
AV	With 3-phase Motor for Inverter
AP	Premium-efficiency, 3-phase motor for inverter With 3-phase motor
ES	With high-efficiency, 3-phase motor
CA	With single phase motor (capacitor run)
CB	With single phase motor (capacitor starting capacitor run)
CD	With single phase motor (capacitor starting)
K1	With foot mount plate*

* Frame size 1160 only

Motor Connection Method	
M	Gearmotor

Model Symbol	
Z	PREST NEO Foot mount ZNHM type Flange mount ZNFM type
G	PREST NEO Hollow shaft GHYM type

Input Capacity Symbol (4P)		
004	40W	(1/20HP)
006	60W	(1/12HP)
009	90W	(1/9HP)
01	0.1kW	(1/8HP)
02	0.2kW	(1/4HP)
05	0.4kW	(1/2HP)
08	0.55kW	(3/4HP)
1	0.75kW	(1HP)
2	1.5kW	(2HP)
3	2.2kW	(3HP)

Frame Size							
ZNHM type ZNFM type	1160	1180	1220	1280	1320	1400	1500
			1221	1281	1321	1401	1501
GHYM type	A330						

1-4 Gearmotor Specification Symbol

Symbol meanings are shown below. Please confirm that the type matches the order.
The specification symbol is on the nameplate as far as it is specified at an order.

Digit	①	②	③	④	⑤	⑥
	J	2	N	Q	L	A

3rd Digit Operation environment

N	Indoor
A	Outdoor
B	Light dust proof type
E	Increased indoor safety, explosion proof
F	Increased outdoor safety, explosion proof
W	Waterproof
9	Others

5th Digit Terminal box mounting position (from output side)

L	Left	R	Right
T	Top	B	Bottom

4th Digit Terminal box type

Q	Resin, terminal block type
P	Resin, lug type
T	Steel plate, terminal block type
S	Steel plate, lug type
B	Aluminum, terminal block type
A	Aluminum, lug type
X	Without terminal box

1st Digit	Country code	2nd Digit	Voltage (V)	Frequency (Hz)
J	Japan	2	200/200/220	50/60/60
			200/220	60/60 *
		4	400/400/440	50/60/60
			400/440	60/60 *
		1	100/100	50/60
		D	100/100/200/200	50/60/50/60
U	U.S.A	B	230/460	60
		5	230	60
		6	460	60
A	Canada	B	230/460	60
E	Europe	2	200	50
		C	220/380	50
				60 *
		8	230/400	50
				60 *
		4	400	50
				60 *
C	China	A	220	50
		C	220/380	50
				60 *
		3	380	50
			380/400/415	50
K	Korea	C	220/380	60
		4	440	60
F	South East Asia (Excluding Singapore)	8	230/400	50
				60 *
		4	400	50
				60 *

* indicates when a motor for inverter is used.
(Type with base frequency of 60Hz is as standard.)

6th Digit Lead wire direction

A	A Type 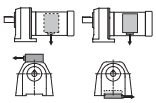	B	B Type 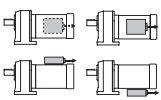	C	C Type 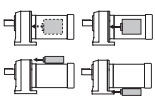	D	D Type 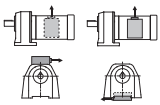
X	Without terminal box						

1-5 Motor Type

Symbol meanings are shown below. Please confirm that the specification matches the order.

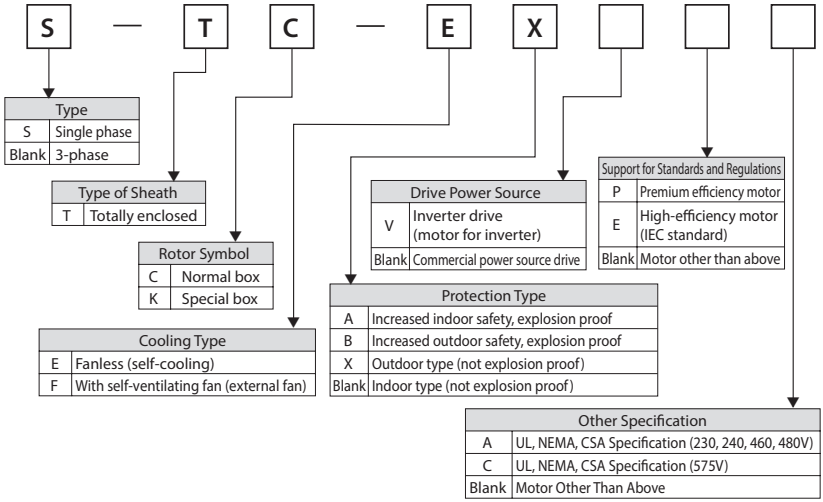

1-6 Brake Type

Table 1-1 shows the relationship between standard brake type and motor type and capacity range.

Table 1-1 Brakes

Brake type	Motor Capacity (kW)					
	3-phase motor	Premium-efficiency, 3-phase motor	3-phase Motor for Inverter	Premium-efficiency, 3-phase motor for Inverter	High-efficiency, 3-phase motor	Single phase motor
MB-003	40W	-	-	-	-	40W
MB-005	60W 90W	-	-	-	-	60W 90W
FB-01A1	0.1	-	-	-	-	-
FB-02A1	0.2	-	0.1	-	-	-
FB-05A1	0.4	-	0.2	-	0.2	-
FB-1D	0.55	-	0.4	-	0.4	-
FB-1E	-	0.75	-	0.75	-	-
FB-2E	-	1.5	-	1.5	-	-
FB-3E	-	2.2	-	2.2	-	-

Note: Depending on the specification, brake type may differ from the types shown in Table 1-1. Check the nameplate.

If this product is not for immediate use, note the following points when storing it.

2-1 Storage Location

Store the product indoors in a clean, dry location.

Do not store outdoors. Store in a location that is free of moisture, dust, extreme temperature changes, corrosive gases, etc.

2-2 Storage Time

- The storage time should be within one year.
- If the storage time exceeds one year, adherence to special rust prevention specifications is required. Please consult with us.
- If for export, adherence to export rust prevention specifications is required. Please consult with us.
- Standard rust prevention specifications

External rust prevention	Rust prevention oil is applied when shipping from the factory. Check rust conditions every six months after shipment. Reapply the rust prevention process, if necessary.
Internal rust prevention	Store in an ordinary factory or warehouse in an environment free of moisture, dust, extreme temperature changes, corrosive gases, etc.

2-3 Using after Storage

- Oil seals are affected by temperature, ultraviolet light and other ambient conditions and can easily degrade. After long storage periods, inspect before operation, and replace any degraded seals with new seals.
- At startup, check that there are no unusual noises, vibrations, temperature rises, or other symptoms. For motor with brakes, check that brakes work properly. If any abnormalities are found, immediately contact the nearest authorized service station.

3. Transportation

⚠ DANGER

- Do not stand directly under a unit suspended by a crane or other lifting mechanism; otherwise, injury, or death may result.

⚠ CAUTION

- Exercise ample care so as not to drop the unit.
  When a hanging bolt or hole is provided, be sure to use it. After mounting a unit to a machine, do not hoist the entire machine using the hanging bolt or hole; otherwise, personal injury or damage to the equipment and/ or lifting device may result.
- Before hoisting, refer to the rating plate, crate, outline drawing, catalog, etc. for the weight of the unit. Never hoist a unit that exceeds the rating of the crane or other mechanism being used to lift it; otherwise, personal injury or damage to the equipment and/or lifting device may result.
- Use an appropriate hanging bolt or hole, and make sure that the eye-bolt and/or nut is not loose before hoisting.

⚠ DANGER

- Do not use a standard unit in an explosive atmosphere (which is likely to be filled with explosive gas or steam). Under such conditions, an explosion proof motor should be used; otherwise, explosion, ignition, electric shock, or damage to the equipment may result.
- In the case of explosion proof motor, use a motor that has specifications that are appropriate for a dangerous location (a location where gas or volatile vapor is present); otherwise, explosion, ignition, electric shock, or damage to the equipment may result.

⚠ CAUTION

- Do not use the products for purposes other than those shown on the nameplate or in the manufacturing specifications; otherwise, electric shock, personal injury, or damage to the equipment may result.
- Do not place flammable objects around the gearmotor; otherwise, fire may result.
- Do not place any object around the gearmotor that will hinder ventilation. Insufficient ventilation can cause excessive heat build-up that may result in burns or fire.
- Do not step on or hang from the products; otherwise, personal injury, or damage to the equipment may result.
- Do not touch the shaft end of the gearmotor, inside keyways, or the edge of the motor fan with bare hands; otherwise, injury may result.
- When the unit is used in food processing applications, machines for clean room and so on, vulnerable to oil contamination, install an oil pan or other such device to cope with grease leakage due to breakdown or failure; otherwise, grease leakage may damage products.

4. Installation

4-1 Installation Location

Ambient temperature: −10 to +40℃

Ambient humidity: 85%RH or less with no condensation

Altitude: Maximum 1,000 m

Atmosphere: No corrosive or volatile gases, no steam
Dust-free, well-ventilated area.

Installation location:

Indoor type: Indoors (area with minimal dust, no contact with water)

Outdoor type: Indoors or outdoors (place where are got wet with common rainwater not but direct heavy wind and rain)

Waterproof type (Protection class IP65/Dust-tight, water jets protection type):
A structure that is not adversely affected by water jets from any direction.
It cannot be used in water or in environments where strong water jets are splashed (high-pressure cleaning) or cleaned with chemicals.

Waterproof type (Protection class IP67/Dust-tight, immersion protection type):
A structure that is submerged in water at the specified water depth and time and is not adversely affected even if water enters.
It cannot be used in an environment where a strong water jets are splashed (high-pressure cleaning) or cleaned with chemicals.

vibration: Maximum 1G

- Mounting in conditions other than the above requires adherence to optional specifications. Please consult with us.
- Drives built to specifications, such as explosion proofing, can be used in the specified mounting environments. However, concerning the connector to the machine used, implement measures based on the mounting environment.
- Mount in a location that enables easy operation, such as inspection and maintenance.
- Mount on a sufficiently rigid base.

4-2 Mounting Angle

Foot mount ZNHM type Flange mount ZNFM type	There is no limit on a mounting angle.
Hollow shaft GHYM type	Output shaft is horizontal.

There is no limitation on a mounting angle unless it is originally specified the certain angle in manufacturing.

Do not remove the motor's eye-bolt. In the rare case that it is removed, insert a bolt or other appropriate material into the screw hole to prevent water or other substances from entering the motor through the screw hole.

⚠ CAUTION

- Confirm the rotation direction before coupling the unit with the driven machine. Incorrect rotation direction may cause personal injury or damage to the equipment.
- When operating the product alone (uncoupled), remove the key that is temporarily attached to the output shaft;
  otherwise the key could fly off, and injury may result.
- Cover rotating parts; otherwise, injury may result.
- When coupling the product with a load, check that the centering, the belt tension and parallelism of the pulleys are within the specified limits. When the unit is directly coupled with another machine, check that the direct coupling accuracy is within the specified limits. When a belt is used for coupling the unit with another machine, check the belt tension. Correctly tighten bolts on the pulley and coupling before operation; otherwise, injury may result because of misalignment.

5-1 Checking Rotational Direction

Table 5-1 shows the direction of output shaft rotation when wiring is performed as on P20–32.

Table 5-1 Direction of Output Shaft Rotation

When wiring is performed as shown on P20–32, the motor shaft rotates to the right as seen from the anti-load side.
In the following diagrams, arrows show the direction of output shaft rotation in this case.

Frame Size		Reduction Ratio	
Foot mount ZNHM type Flange mount ZNFM type	1160	7.5, 10, 12.5, 15, 20, 25	5, 30, 40, 50, 60, 70
	1180	3, 5, 10, 15, 20, 25, 30, 40, 50	-
	1220	3, 5, 10, 15, 20, 25, 30	60, 80, 100, 120, 160, 200
	1221	30	40, 50, 60, 80, 100
	1280	3, 5, 10, 15, 20, 25, 30	100, 120, 160, 200
	1281	30	40, 50, 60, 80, 100
	1320	3, 5, 10, 15, 20, 25, 30	100, 120, 160, 200
	1321	30	40, 50, 60, 80, 100
	1400	3, 5, 10, 15, 20, 25, 30	100, 120, 160, 200
	1401	30	40, 50, 60, 80, 100
	1500	-	100, 120, 160, 200
	1501	30	40, 50, 60, 80, 100
Hollow shaft GHYM type	A330	-	15, 20, 25, 30, 40, 50
Output Shaft Rotation direction (Seen from load side)		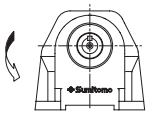 Rotating in the same direction as the motor shaft	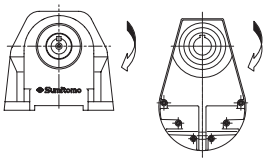 Rotating in the reverse direction as the motor shaft

Note: 1. Switch the SW in the connection diagram on P22, P31, and P32 for reverse rotation of a 40 - 90W single phase power source motor.
2. To cause reverse rotation of a 0.1 to 0.4kW single phase power source motor, reverse Z1 and Z2 in the connection diagram on P23 and P24.
3. To cause reverse rotation of a 3-phase power source motor, reverse R and T in the connection diagram on P20, and P25 - 28.

5-2 Mounting Connected Equipment

- When mounting connected equipment, do not apply impact or excessive axial load to the shaft. The bearing could be damaged, or the collar could come off.
- Shrinkage or shaft-end screw fit (see Figure 5-1) is recommended.

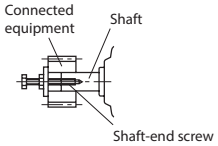

Figure 5-1

(1) When using a coupling

The alignment accuracy (A, B, X) in figure 5-2 should be no greater than that shown in Table 5-2.

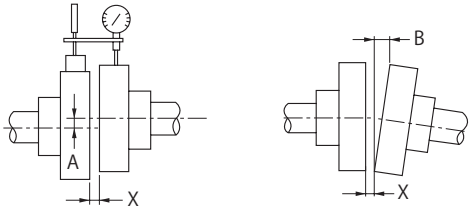

Figure 5-2

Table 5-2 Alignment Precision for Flexible Coupling

Allowable tolerance A	0.1 mm or manufacturer-specified value
Allowable tolerance B	0.1 mm or manufacturer-specified value
X	manufacturer-specified value

(2) When using chains, sprockets, or gears

- When using a chain, attach so that the chain tension angle is perpendicular to the shaft.
- Refer to the chain catalog or other reference for chain tension.
- Select a sprocket or gear pitch diameter that is at least three times the shaft diameter.
- The working load point of the sprocket or gear should go from the center of the shaft to this product. (See Figure 5-3)

(3) When using a V belt

- Over-tightening the V belt will damage the shaft and bearing. Refer to the V belt catalog or other reference for V belt tension.
- The parallelism, eccentricity β of the two pulleys should be within 20´. (See Figure 5-4)
- When using multiple V belts, use a matched set having the same length.

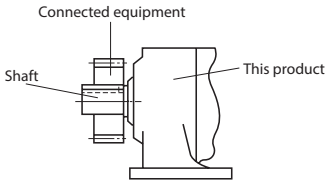

Figure 5-3

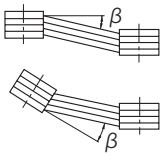

Figure 5-4

5-3 Precautions for Mounting the Hollow Shaft GHYM Type

(1) Driven shaft size

- If the driven shaft dimension is small and there is a space from the hollow shaft, abrasion from fretting tends to occur. The resulting abrasion powder may get pinched in the oil seal, causing the grease to leak.
  Furthermore, vibrations due to the space may damage the parts inside the drive.
- If the driven shaft length is short, excessive force is applied on the hollow shaft, possibly causing vibration or grease leak.
- If the effective length of driven shaft is short, the key and the keyway may be damaged.

(2) Mounting on the driven shaft

- If the hollow shaft end face is hit with a metal hammer or the driven shaft was biting on the hollow shaft when assembled, the hollow shaft may become deformed and the oil seal contact may become uneven, causing the grease to leak.
- If the case or the oil seal is hit, the damaged or deformed case or oil seal may cause the grease to leak.

(3) Fixing on the driven shaft

- If the hollow shaft is not fixed, it may vibrate in the thrust direction due to the vibration from the operation or from the machine side, possibly causing the oil seal performance to become uneven and the grease to leak.
  The vibration may also damage the parts inside the drive.

(4) Torque arm retainer

- Fixing the torque arm retainer may prevent the case from following the driven shaft movement, and as a result of excessive force being applied on the hollow shaft, the grease may leak through the oil seal.
  It may also damage the parts inside the drive.

When using the hollow shaft GHYM Type, be sure to refer to the mounting procedure on P14 and P15.

5-4 Hollow Shaft GHYM Type Torque Arm Mounting

(1) Driven shaft length

When mounting the driven shaft onto the hollow shaft, the effective length of the key should be 45mm or more.
Refer to consult us for more details.

(2) Torque arm mounted option

[1] Mounting on the driven shaft

- Apply the molybdenum disulfide grease to the surface of the driven shaft and the bore of the hollow shaft, and insert the product into the driven shaft.
- If the fit is tight, lightly hit the end face of the hollow shaft with a wooden hammer to insert the shaft. When doing so, never hit the case or the oil seal directly. If the fit is particularly tight, use a jig such as the one shown in Figure 5-5 for a smoother insertion.

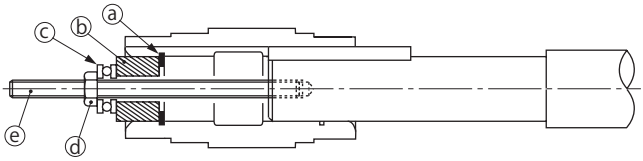

ⓐ…Snap ring ⓑ…Spacer ⓒ…Thrust bearing ⓓ…Nut ⓔ…Double end threaded bolt

Figure 5-5 Mounting Jig

- The hollow shaft is created with a JIS H8 tolerance. If an impact is expected or the overhung load is significant, make the fit of the hollow shaft and the driven shaft tight. (JIS js6 or k6 is recommended for the driven shaft tolerance.)

[2] Fixing onto the driven shaft

- Be sure to fix the product onto the Stepped driven shaft.

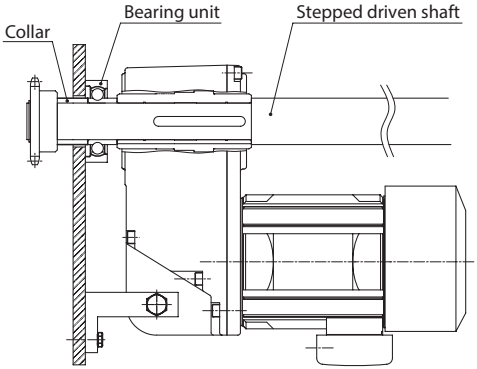

Figure 5-6 Method of Fixing In Which the Product Does Not Move to the Machine Side

[3] Torque arm retainer

- Mount the torque arm on the driven shaft machine side of the case. Use a hexagon socket head bolt to mount on the case. (See Table 5-3 for the size.)
- Ensure there is some degree of freedom for the torque arm retainer so that no excessive force is applied between the product and the driven shaft.
  Never fix the torque arm using a retainer bolt.
- If a lot of starting and stopping are expected, or for repetitious plugging operations, attach a blanket cylinder between the torque arm and the mounting bolt (or the spacer) to lesson the impact.

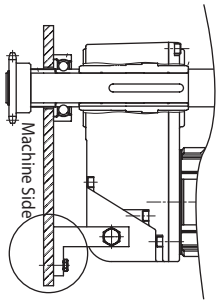

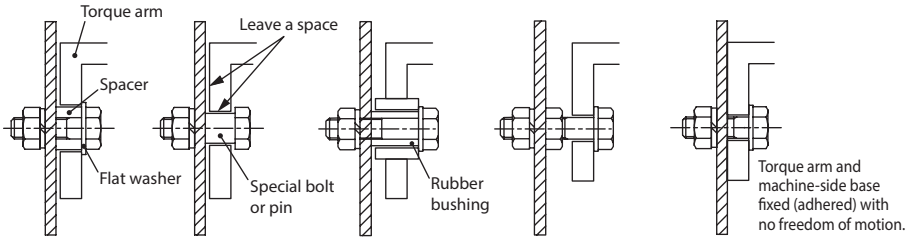

Adjust the amount of the space to a size that does not result in excessive force or contact based on the movement of the machine.

Good example

The retainer bolt, machine or the product may be damaged due to excessive force.

Bad example

Figure 5-7 Retainer Mounting Examples

Table 5-3 Hexagon Socket Head Bolt Sizes

Frame size	Bolt size
A330	M10

(3) Removing from the driven shaft

Be careful not to allow excessive force to apply between the case and the hollow shaft. Use a jig such as the one shown in Figure 5-8 to remove it more smoothly.
The mounting, fixing and removal jig and parts are to be prepared by the customer.

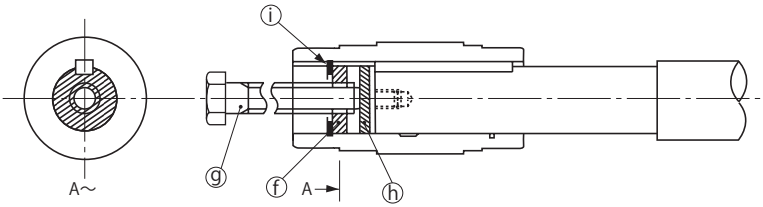

ⓕ ……Spacer ⓖ ……Finished bolt ⓗ ……Disc ⓘ ……Snap ring

Figure 5-8 Removal Jig

6. Wiring

This manual shows wiring for motors with Japanese standard specifications. Please consult with us for motors with overseas specifications.

⚠ DANGER

- Do not handle the unit when cables are live. Be sure to turn off the power when operating on the unit; otherwise, electric shock may result.
- Connect a power cable to the unit according to the diagram shown inside the terminal box or in the maintenance manual; otherwise, electric shock or fire may result.
- Do not forcibly bend, pull, or clamp the power cable and lead wires; otherwise, electric shock or fire may result.
- Correctly ground the grounding bolt; otherwise, electric shock may result.
- The lead-in condition of explosion proof motor shall conform to the facility's electrical codes, extension regulations and explosion proofing guide, as well as the maintenance manual; otherwise, electric shock, personal injury, explosion, fire or damage to the equipment may result.
- For an explosion proof motor and single phase power source motor, inverter drive is not allowed.
- For a waterproof motor, prevent the end of a cab tire cable, rectifier and capacitor from contacting water.

⚠ CAUTION

- When wiring, follow the facility's electrical codes and extension regulations; in order to prevent burning, electric shock, injury, and fire.
- The motor is not equipped with a protection device. However, it is compulsory to install an overload protector according to facility electrical codes. It is recommended to install other protective devices (earth leakage breaker, etc.), in addition to an overload protector, in order to prevent burning, electric shock, injury, and fire.
- Do not touch the terminals when measuring insulation resistance; otherwise, electric shock may result.
- Voltage PWM inverters that use IGBT generate high-voltage surges at the motor terminals, which may degrade the insulation on the motor windings. Especially such as when the cable is long in the 400V class, a surge voltage over 1300V occurs. Therefore, in this case, install an LCR filter, AC reactor, etc. between the inverter and motor to inhibit the surge voltage.
- For units For motor with brake, do not turn on connection power to the brake coil when the motor is stopped. Otherwise coil burnout fire, may result. Also, mistaken wiring could damage the rectifier.
- When measuring the insulation resistance of Explosion proof motor, confirm that there is no gas or explosive vapor in the vicinity, in order to prevent explosion or ignition.
- If ambient temperature exceeds 60°C, place the rectifier in a location where the temperature is 60°C or less. In this case, always protect the entire rectifier with a cover. However, standard ambient temperature conditions for units with and without brakes is -10 - 40°C. (Manufacturing with a special specification is required for operation in an environment where ambient temperature exceeds 40°C.)
- Long cables cause large voltage drops. Select cables with appropriate diameter so that the voltage drop will no greater than 2%.
- After wiring Outdoor types and explosion proof types, check that terminal box mounting bolts are not loose, and correctly attach the terminal box cover.
- For a single phase motor, do not take a starting capacitor as an operation capacitor when using it; otherwise, the capacitor will be damaged.
- For a single phase motor, do not scratch a plastic film of the starting capacitor, in order to prevent electric shock. otherwise, electric shock may result.
- For a 40 - 90W waterproof motor, do not open the cap of a waterproof/dust-proof box (see Figure 6-1); otherwise, waterproof/dust-proof effects will be lost and electric shock, damage, and fire may result.

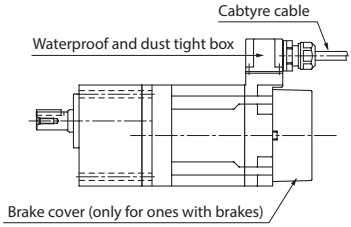

Figure 6-1

- For a 40 - 90W waterproof motor with brake, the brake rectifier is delivered in a separate shipment, and should be installed inside the control panel and wired accordingly.

6-1 Removing and Attaching the Resin Terminal Box Cover

3-phase motor: 0.1–0.4kW, high-efficiency, 3-phase motor: 0.2kW, 3-phase motor for inverter: 0.1–0.2kW

(1) Removal

As shown in figure 6-1, to remove the cover, grab the sides of the terminal box, and pull it toward you.

(2) Attachment

Push the terminal box cover from above the terminal box case until a click is heard.

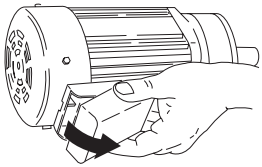

Figure 6-1

6-2 Measuring Insulation Resistance

When measuring insulation resistance, always disconnect the control panel and measure the motor alone.

Measure insulation resistance before wiring. Insulation resistance (R) is changed by a number of factors, including motor output, voltage, type of insulation, winding temperature, moisture, degree of fouling, time used, and amount of time test voltage is applied. However, normally, it must be above the values in Table 6-1.

Table 6-1 Values for Insulation Resistance

Motor voltage	Megohmmeter Voltage	Insulation Resistance (R)
Low-voltage electric motors of no more than 600V	500V	Minimum 1 MΩ

Reference: JEC -2100 contains the following equation:

$$R \geqq \frac{\text{Rated Voltage (V)}}{\text{Rated output power (kW)} + 1{,}000} \quad (\text{M}\Omega)$$

$$R \geqq \frac{\text{Rated Voltage (V)} + (\text{RPM}/3)}{\text{Rated output power (kW)} + 2{,}000} + 0.5 \ (\text{M}\Omega)$$

Low insulation resistance is a sign that there is an insulation failure. Do not apply power. Consult an accredited service station.

6-3 Coordination of System Protection

- Use a wiring breaker for short circuit proofing.
- Use an overload protection device designed to handle currents that exceed the rated current on the nameplate.
- For increased safety, explosion proof motors, use an overload protection device capable of protecting the locked rotor current on the nameplate within the allowable locking time.

6-4 Connecting the Power Cable.

Connect the power cable and motor lead wire by clasping in a pressure connection terminal as shown in Figure 6-2.

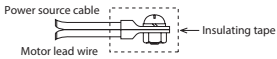

Figure 6-2

6-5 Motor Wiring

Shows the pages for motor wiring diagrams.

Table 6-2 Without Brake

Motor type		Capacity range (kW)	Number of Lead Wires	Page	
				Direct Input from Commercial Power Source	Inverter Drive
3-phase motor	Standard	40W - 0.55	3	P20	P21
	Increased safety, explosion proof	0.1 - 2.2	3	P20	-
Premium-efficiency, 3-phase motor	Standard	0.75 - 2.2	3	P20	P21
	Increased safety, explosion proof	0.75 - 2.2	3	P20	-
3-phase motor for Inverter		0.1 - 0.4	3	-	P21
Premium-efficiency, 3-phase motor for Inverter		0.75 - 2.2	3	-	P21
High-efficiency, 3-phase motor		0.2 - 0.4	3	P20	P21
Single phase motor		40W - 90W	3	P22	-
		0.1 - 0.2	4	P23	
		0.1 - 0.4	6	P24	

Table 6-3 With Brake

Motor type	Capacity range (kW)	Brake type	Number of Lead Wires	Page		
				One-Direction Rotation	Plugging Rotation	Inverter Drive
3-phase motor	40W	MB-003	5	P25	P27	P29
	60 - 90W	MB-005				
	0.1	FB-01A1		P26	P28	P30
	0.2	FB-02A1				
	0.4	FB-05A1				
	0.55	FB-1D				
Premium-efficiency, 3-phase motor	0.75	FB-1E	5	P26	P28	P30
	1.5	FB-2E				
	2.2	FB-3E				
3-phase motor for Inverter	0.1	FB-02A1	5	-	-	P30
	0.2	FB-05A1				
	0.4	FB-1D				
Premium-efficiency, 3-phase motor for Inverter	0.75	FB-1E	5	-	-	P30
	1.5	FB-2E				
	2.2	FB-3E				
High-efficiency, 3-phase motor	0.2	FB-05A1	5	P26	P28	P30
	0.4	FB-1D				
Single phase motor	40W	MB-003 (Indoor)	5	P31	P31	-
		MB-003 (Waterproof)		P32	P32	
	60 - 90W	MB-005		P31	P31	

Note: 1. Single phase motors 0.1 to 0.2kW are available in two types: four lead wires (capacitor starting type/suffix type CD) and six lead wires (capacitor starting capacitor run type/suffix type CB). Check P4 and the nameplate for the suffix type.
2. Brake type may differ depending on specification. Check the nameplate.
3. For motors with standard Japanese domestic specifications. Please consult with us for motors with overseas specifications.

Shows motor wiring and standard specification for terminals and lead wires that are indicated by symbols.

■ **Without brake. 3-phase power source**

3-phase motor

Premium-Efficiency, 3-Phase Motor

High-efficiency, 3-phase motor

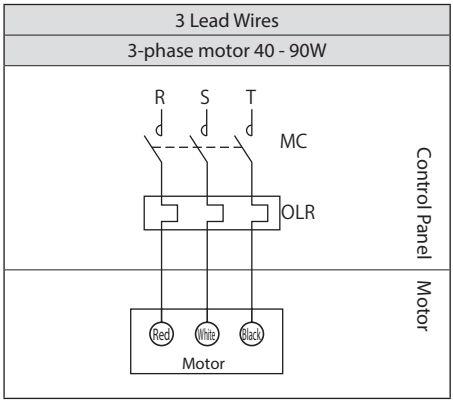

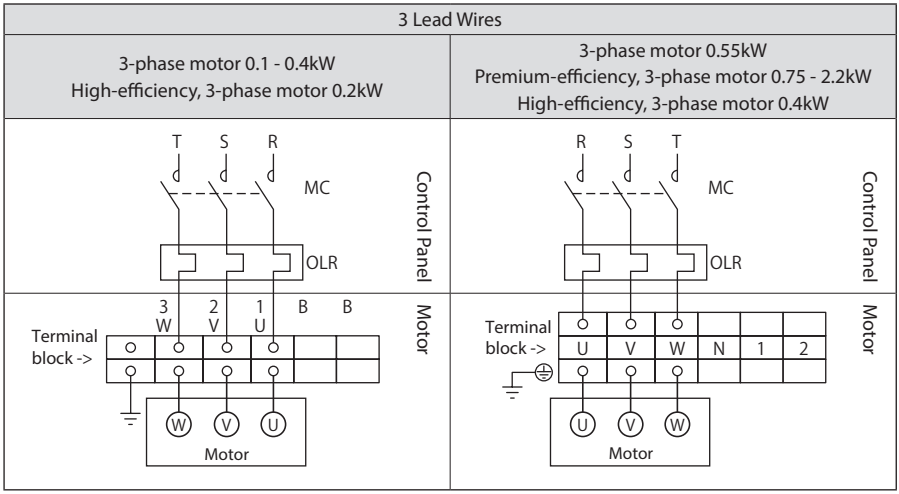

MC: Electromagnetic contactor

OLR: Overload protection device or electronic thermal rela

Customer to prepare.

- This diagram shows cases for motors with standard Japanese domestic specifications. Please consult with us for motors with overseas specifications.
- The terminal block is arrayed in two rows as shown in the above figure. Make sure that wiring of the motor power source is connected to the upper side on the above figure (on which symbols 1, 2, 3, U. V, W, and B are written; cable port side).
- Do not open the cap of a waterproof/dust-proof box (see P17) of a 40 - 90W waterproof motor. Otherwise, waterproof/dust-proof effects will be lost and electric shock, damage, and fire may result.

■ **Without brake. Inverter drive**

3-phase motor
Premium-Efficiency, 3-Phase Motor
3-phase Motor for Inverter
Premium-efficiency, 3-phase motor for inverter
High-efficiency, 3-phase motor

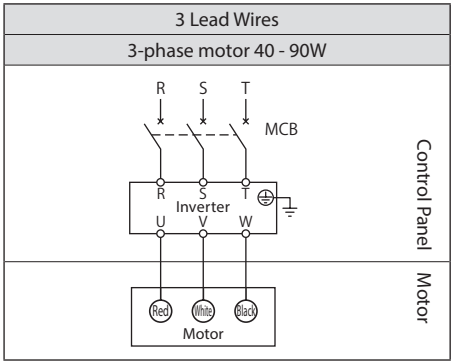

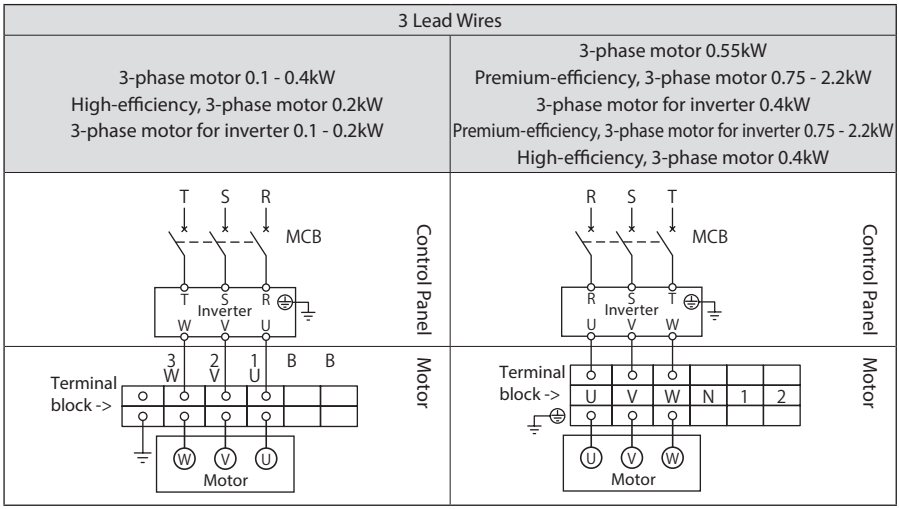

MCB: Breaker for wiring — Customer to prepare.

- This diagram shows cases for motors with standard Japanese domestic specifications. Please consult with us for motors with overseas specifications.
- The motor must be insulated to inverter-drive a 400V class 3-phase motor/high-efficiency, 3-phase motor.
- The terminal block is arrayed in two rows as shown in the above figure. Make sure that wiring of the motor power source is connected to the upper side on the above figure (on which symbols 1, 2, 3, U. V, W, and B are written; cable port side).
- Do not open the cap of a waterproof/dust-proof box (see P17) of a 40 - 90W waterproof motor. Otherwise, waterproof/dust-proof effects will be lost and electric shock, damage, and fire may result.

■ Without brake. Single phase power source

Single phase motor

	Capacitor run 40 - 90W	
	100V class	200V class
Operates rotating in one direction	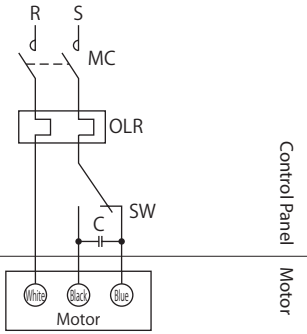	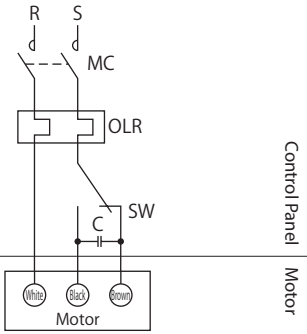
Plugging operation	Switch the above SW for plugging rotation.	

MC: Electromagnetic contactor
OLR: Overload protection device or electronic thermal relay
SW: Plugging switch
C: Capacitor (accessory)

Customer to prepare.

- This diagram shows cases for motors with standard Japanese domestic specifications. Please consult us for motors with overseas specifications.
- Use a capacitor bundled with the product (see Table 6-5 on P34) for wiring.
- Do not open the cap of a waterproof/dust-proof box (see P17) of a 40 - 90W waterproof motor. Otherwise, waterproof/dust-proof effects will be lost and electric shock, damage, and fire may result.
- The capacitor is not waterproof for a waterproof motor.

■ Without brake. Single phase power source

Single phase motor

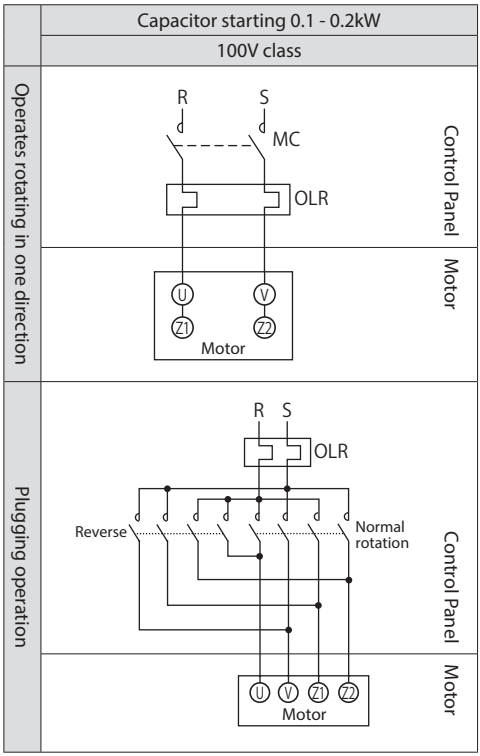

MC: Electromagnetic contactor
OLR: Overload protection device or electronic thermal relay
Electromagnetic contactor for normal and reverse rotation

} Customer to prepare.

- This diagram shows cases for motors with standard Japanese domestic specifications. Please consult with us for motors with overseas specifications.
- Single phase motors 0.1 to 0.2kW are available in two types: four lead wires (capacitor starting type/ suffix type CD) and six lead wires (capacitor starting capacitor run type/suffix type CB). Check P4 and the nameplate for the suffix type.
- Reverse Z1 and Z2 after the motor stopped to rotate the motor reversely in one-direction rotation.
- The capacitor is secured on the motor frame.

■ Without brake. Single phase power source

Single phase motor

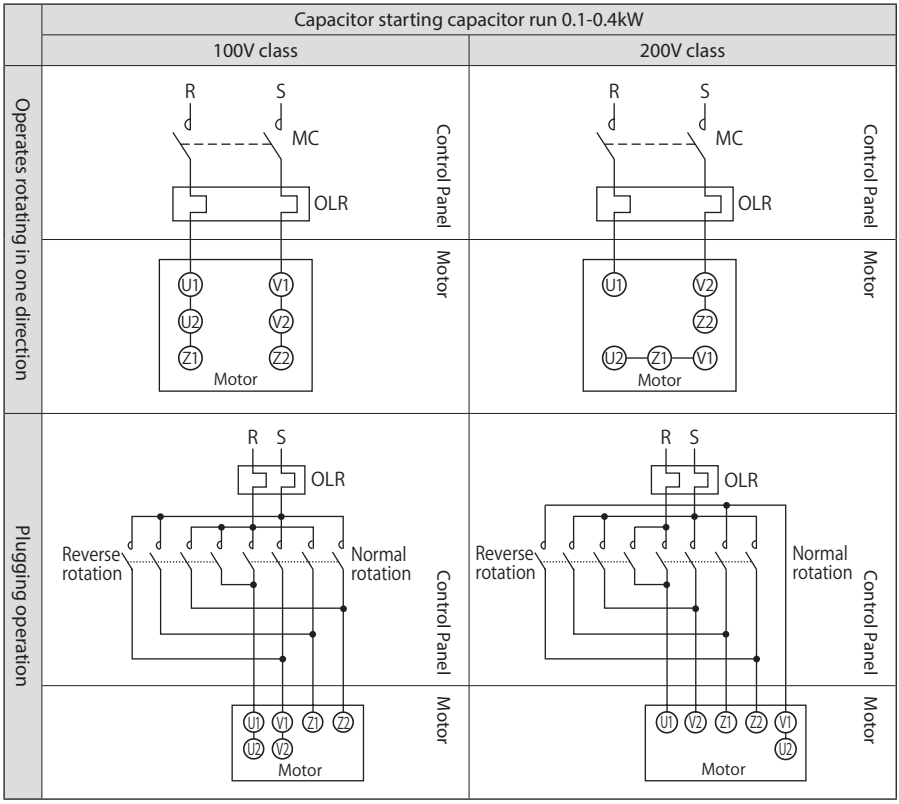

MC: Electromagnetic contactor
OLR: Overload protection device or electronic thermal relay
Electromagnetic contactor for normal and reverse rotation
} Customer to prepare.

- This diagram shows cases for motors with standard Japanese domestic specifications. Please consult us for motors with overseas specifications.
- Single phase motors 0.1 to 0.2kW are available in two types: four lead wires (capacitor starting type/ suffix type CD) and six lead wires (capacitor starting capacitor run type/suffix type CB). Check P4 and the nameplate for the suffix type.
- Reverse Z1 and Z2 after the motor stopped to rotate the motor reversely in one-direction rotation.
- The capacitor is built-in the terminal box.

■ **With brake. 3-phase power source. Operates rotating in one direction.**

3-phase motor

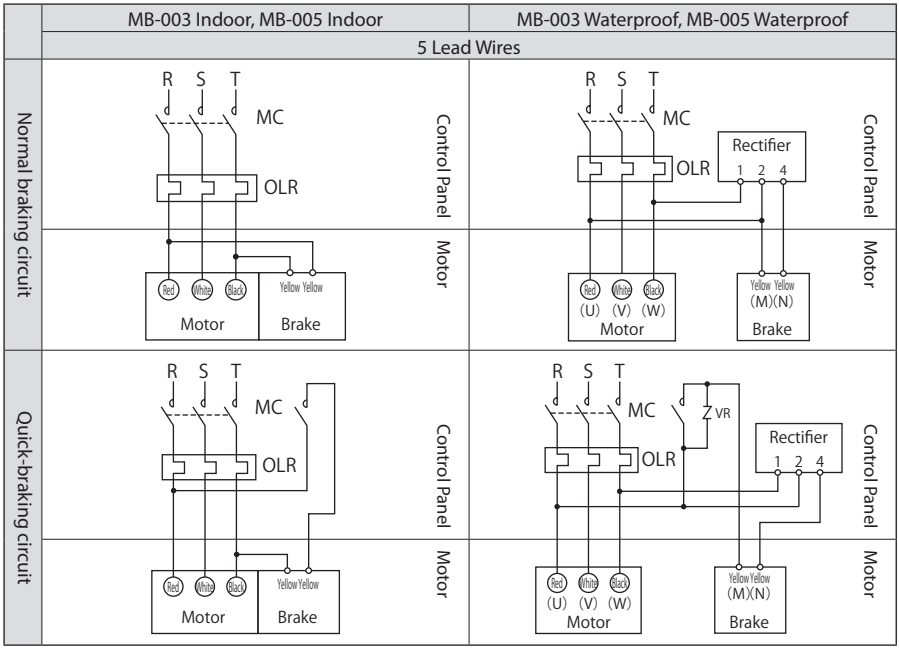

MC: Electromagnetic contactor
OLR: Overload protection device or electronic thermal relay
VR: Varistor (for protecting contact points, rectifier, etc.)
— Customer to prepare.

- This diagram shows cases for motors with standard Japanese domestic specifications. Please consult with us for motors with overseas specifications.
- For brake types, see Table 1-1 on P6.
- Brake action delay time is different between normal and quick-braking circuits. Table 7-2 on P37 shows action delay time. Choose the circuit that matches work requirements.
- Use a quick-braking circuit to improve hoisting equipment and stopping precision.
- Use a quick braking circuit when a phase-advancing capacitor is mounted.
- For information on electromagnetic contactors for quick braking circuits, see Table 6-4 on P33.
- For quick braking-circuits, gang the brake circuit's electromagnetic contactor to the motor's electromagnetic contactor.

- A rectifier for MB-003 indoor type and MB-005 indoor type are built-in the brake unit.
- A rectifier for MB-003 waterproof type and MB-005 waterproof type are placed separately. (Rectifier is not waterproof.)
- A flag ( ) is attached at the lead wire for the MB-003 waterproof type and MB-005 waterproof type 400V class.
- For a waterproof motor, do not open the cap of a waterproof/dust-proof box (see P17); otherwise, waterproof/dust-proof effects will be lost and electric shock, damage, and fire may result.

■ **With brake. 3-phase power source. Operates rotating in one direction.**

3-phase motor
Premium-Efficiency, 3-Phase Motor
High-efficiency, 3-phase motor

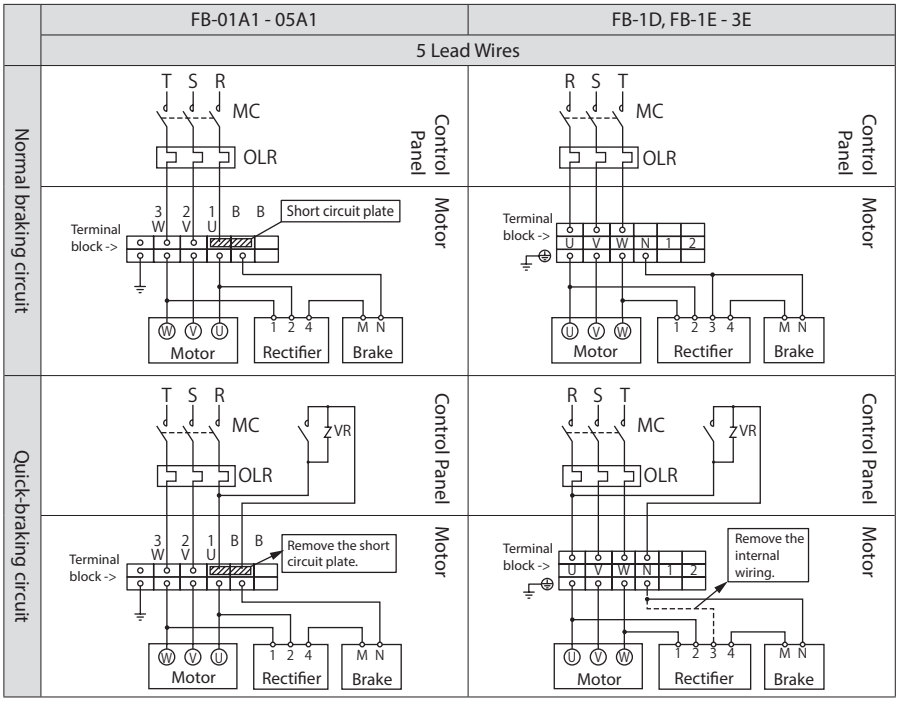

MC: Electromagnetic contactor
OLR: Overload protection device or electronic thermal relay
VR: Varistor (for protecting contact points, rectifier, etc.)
— Customer to prepare.

- This diagram shows cases for motors with standard Japanese domestic specifications. Please consult with us for motors with overseas specifications.
- For brake types, see Table 1-1 on P6.
- The terminal block is arrayed in two rows as shown in the above figure. Make sure that wiring of the motor power source is connected to the upper side on the above figure (on which symbols 1, 2, 3, U. V, W, and B are written; cable port side).
- Brake action delay time is different between normal and quick-braking circuits.
  Table 7-2 on P37 shows action delay time. Choose the circuit that matches work requirements.
- Use a quick-braking circuit to improve hoisting equipment and stopping precision.
- Use a quick braking circuit when a phase-advancing capacitor is mounted.
- For information on electromagnetic contactors and varistors for quick-braking circuits, see Table 6-4 on P33.
- For quick braking-circuits, gang the brake circuit's electromagnetic contactor to the motor's electromagnetic contactor.
- For quick braking circuits of FB-01A1 - 05A1, remove the short circuit plate between the terminal block 1/U and B.
- For quick braking circuits of FB-1D and FB-1E - 3E, remove the internal wiring between terminal block N and rectifier 3.

■ **With brake. 3-phase power source. Plugging operation**

3-phase motor

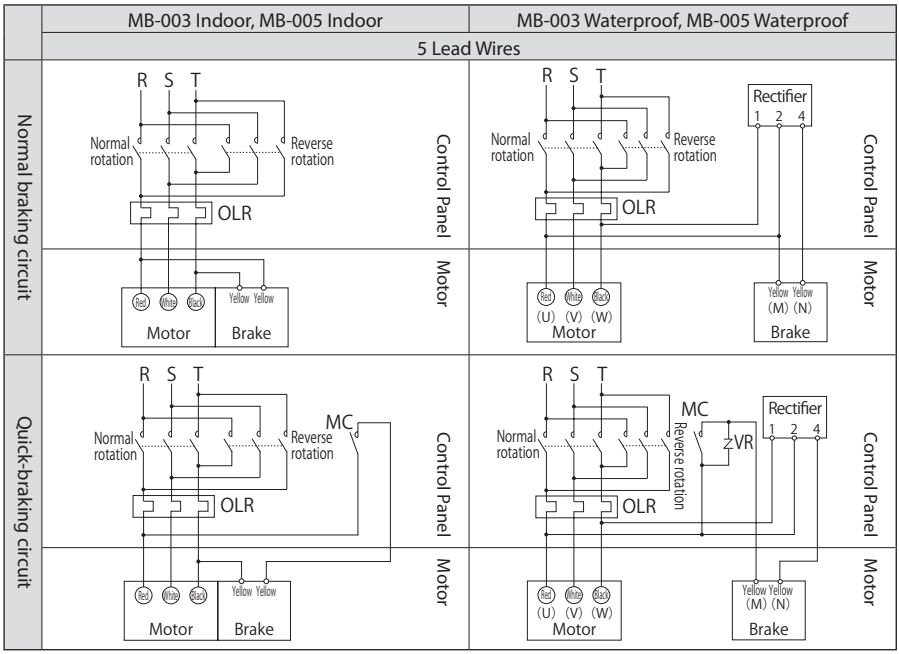

Electromagnetic contactor for normal and reverse rotation
MC: Electromagnetic contactor
OLR: Overload protection device or electronic thermal relay
VR: Varistor (for protecting contact points, rectifier, etc.)
— Customer to prepare.

- This diagram shows cases for motors with standard Japanese domestic specifications. Please consult with us for motors with overseas specifications.
- For brake types, see Table 1-1 on P6.
- Brake action delay time is different between normal and quick-braking circuits.
  Table 7-2 on P37 shows action delay time. Choose the circuit that matches work requirements.
- Use a quick-braking circuit to improve hoisting equipment and stopping precision.
- Use a quick braking circuit when a phase-advancing capacitor is mounted.
- For information on electromagnetic contactors for quick braking circuits, see Table 6-4 on P33.
- For plugging operations using a quick-braking circuit, gang the brake circuit's electromagnetic contactors to the motor's normal and reverse rotation electromagnetic contactors.

- A rectifier for MB-003 indoor type and MB-005 indoor type are built-in the brake unit.
- A rectifier for MB-003 waterproof type and MB-005 waterproof type are placed separately. (Rectifier is not waterproof.)
- A flag ( ) is attached at the lead wire for the MB-003 waterproof type and MB-005 waterproof type 400V class.
- For a waterproof motor, do not open the cap of a waterproof/dust-proof box (see P17); otherwise, waterproof/dust-proof effects will be lost and electric shock, damage, and fire may result.

■ With brake. 3-phase power source. Plugging operation

3-phase motor

Premium-Efficiency, 3-Phase Motor

High-efficiency, 3-phase motor

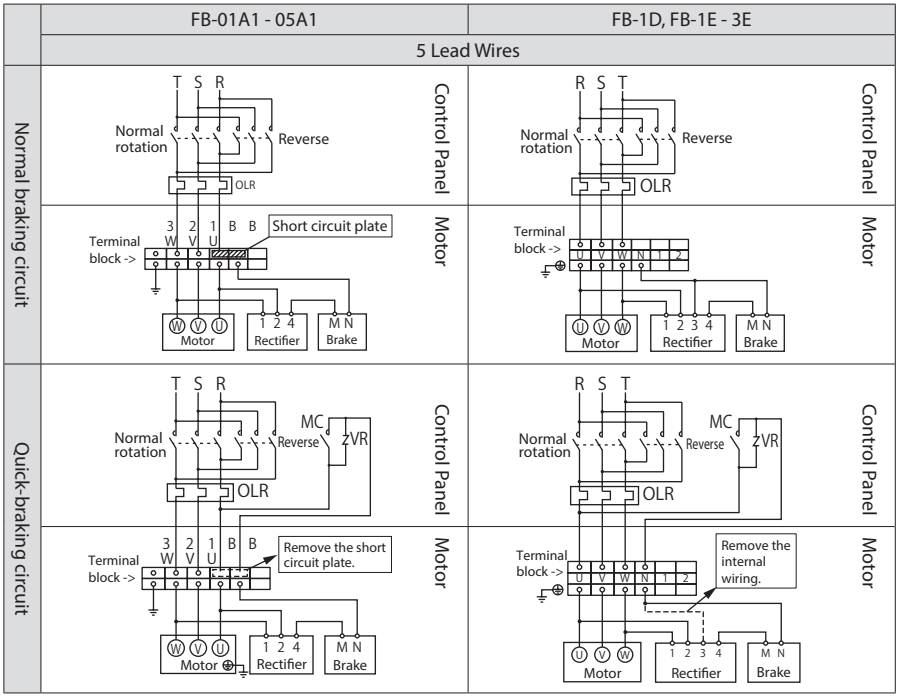

Electromagnetic contactor for normal and reverse rotation

MC: Electromagnetic contactor

OLR: Overload protection device or electronic thermal relay

VR: Varistor (for protecting contact points, rectifier, etc.)

— Customer to prepare.

- This diagram shows cases for motors with standard Japanese domestic specifications. Please consult with us for motors with overseas specifications.
- For brake types, see Table 1-1 on P6.
- The terminal block is arrayed in two rows as shown in the above figure. Make sure that wiring of the motor power source is connected to the upper side on the above figure (on which symbols 1, 2, 3, U. V, W, and B are written; cable port side).
- Brake action delay time is different between normal and quick-braking circuits.
  Table 7-2 on P37 shows action delay time. Choose the circuit that matches work requirements.
- Use a quick-braking circuit to improve hoisting equipment and stopping precision.
- Use a quick braking circuit when a phase-advancing capacitor is mounted.
- For information on electromagnetic contactors and varistors for quick-braking circuits, see Table 6-4 on P33.
- For plugging operations using a quick-braking circuit, gang the brake circuit's electromagnetic contactors to the motor's normal and reverse rotation electromagnetic contactors.
- For quick braking circuits of FB-01A1 - 05A1, remove the short circuit plate between the terminal block 1/U and B.
- For quick braking circuits of FB-1D and FB-1E - 3E, remove the internal wiring between terminal block N and rectifier 3.

■ With Brake. Inverter Drive

3-phase motor

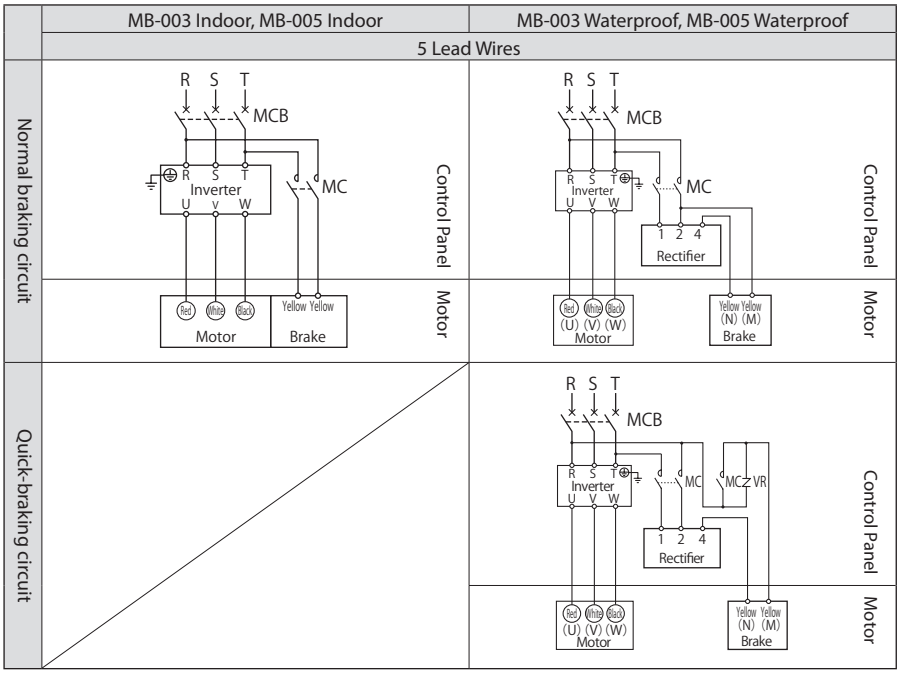

MC: Electromagnetic contactor
MCB: Breaker for wiring
VR: Varistor (for protecting contact points, rectifier, etc.)
— Customer to prepare.

- This diagram shows cases for motors with standard Japanese domestic specifications. Please consult with us for motors with overseas specifications.
- For brake types, see Table 1-1 on P6.
- Brake action delay time is different between normal and quick-braking circuits.
  Table 7-2 on P37 shows action delay time. Choose the circuit that matches work requirements.
- Use a quick-braking circuit to improve hoisting equipment and stopping precision.
- Use a quick-braking circuit when a phase-advancing capacitor is mounted.
- For information on electromagnetic contactors and varistors for quick-braking circuits, see Table 6-4 on P33.

- Always use the inverter's power source side for the brake power source.
- Match the opening and closing of the brake circuit's electromagnetic contactor to the timing of the inverter control.

- A rectifier for MB-003 indoor type and MB-005 indoor type are built-in the brake unit.
- A rectifier for MB-003 waterproof type and MB-005 waterproof type are placed separately. (Rectifier is not waterproof.)
- A flag ( ) is attached at the lead wire for the MB-003 waterproof type and MB-005 waterproof type 400V class.
- For a waterproof motor, do not open the cap of a waterproof/dust-proof box (see P17); otherwise, waterproof/dust-proof effects will be lost and electric shock, damage, and fire may result.

■ With Brake. Inverter Drive

3-phase motor
Premium-Efficiency, 3-Phase Motor
3-phase Motor for Inverter
Premium-efficiency, 3-phase motor for inverter
High-efficiency, 3-phase motor

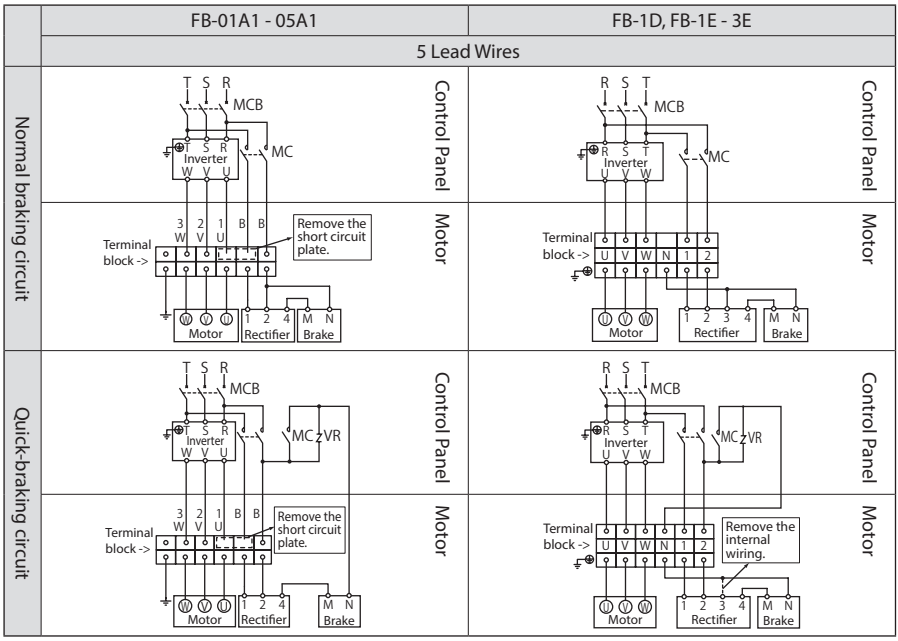

MC: Electromagnetic contactor
MCB: Breaker for wiring
VR: Varistor (for protecting contact points, rectifier, etc.)
— Customer to prepare.

- This diagram shows cases for motors with standard Japanese domestic specifications. Please consult with us for motors with overseas specifications.
- For brake types, see Table 1-1 on P6.
- The motor must be insulated to inverter-drive a 400V class 3-phase motor/high-efficiency, 3-phase motor.
- The terminal block is arrayed in two rows as shown in the above figure. Make sure that wiring of the motor power source is connected to the upper side on the above figure (on which symbols 1, 2, 3, U. V, W, and B are written; cable port side).
- Brake action delay time is different between normal and quick-braking circuits.
  Table 7-2 on P37 shows action delay time. Choose the circuit that matches work requirements.
- Use a quick-braking circuit to improve hoisting equipment and stopping precision.
- Use a quick braking circuit when a phase-advancing capacitor is mounted.
- For information on electromagnetic contactors and varistors for quick-braking circuits, see Table 6-4 on P33.
- For inverter drive of a 3-phase motor, premium-efficiency, 3-phase motor, high-efficiency, 3-phase motor, remove the short circuit plate between terminal block1/U and B.
  (A 3-phase motor for inverter and premium-efficiency 3-phase motor for inverter do not have a short circuit plate.)
- For quick braking circuits of FB-1D and FB-1E - 3E, remove the internal wiring between terminal block N and rectifier 3.

- Always use the inverter's power source side for the brake power source.
- Match the opening and closing of the brake circuit's electromagnetic contactor to the timing of the inverter control.

■ With brake. Single phase power source

Single phase motor

	MB-003 Indoor, MB-005 Indoor	
	Capacitor run	
	100V class	200V class
Normal braking circuit	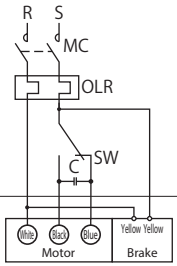	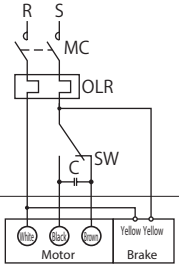
Quick-braking circuit	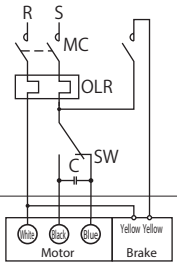	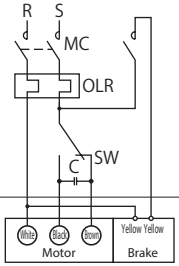

MC: Electromagnetic contactor
OLR: Overload protection device or electronic thermal relay
SW: Plugging switch
C: Capacitor (accessory)

— Customer to prepare.

- This diagram shows cases for motors with standard Japanese domestic specifications. Please consult with us for motors with overseas specifications.
- For brake types, see Table 1-1 on P6.
- Use a capacitor bundled with the product (see Table 6-5 on P34) for wiring.
- Brake action delay time is different between normal and quick-braking circuits. Table 7-2 on P37 shows action delay time. Choose the circuit that matches work requirements.
- Use a quick-braking circuit to improve hoisting equipment and stopping precision.
- Use a quick braking circuit when a phase-advancing capacitor is mounted.
- For information on electromagnetic contactors for quick braking circuits, see Table 6-4 on P33.
- For quick braking-circuits, gang the brake circuit's electromagnetic contactor to the motor's electromagnetic contactor.

- Switch the above SW for plugging rotation. (Immediate plugging rotation is not allowed.)
- A rectifier is built-in the brake unit.

■ With brake. Single phase power source

Single phase motor

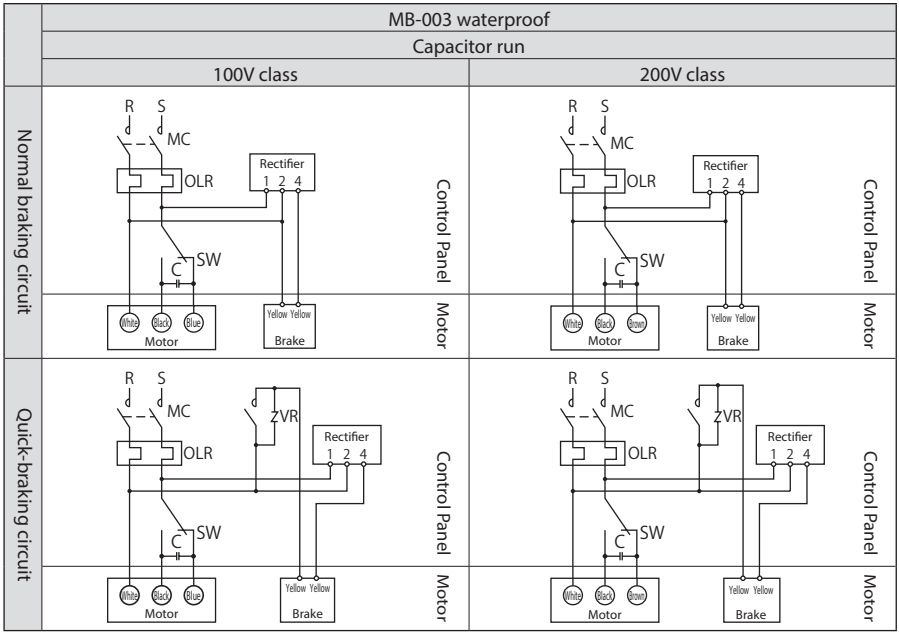

MC: Electromagnetic contactor
OLR: Overload protection device or electronic thermal relay
SW: Plugging switch
VR: Varistor (for protecting contact points, rectifier, etc.)
C: Capacitor (accessory)

Customer to prepare.

- This diagram shows cases for motors with standard Japanese domestic specifications. Please consult with us for motors with overseas specifications.
- For brake types, see Table 1-1 on P6.
- Use a capacitor bundled with the product (see Table 6-5 on P34) for wiring.
- Brake action delay time is different between normal and quick-braking circuits. Table 7-2 on P37 shows action delay time. Choose the circuit that matches work requirements.
- Use a quick-braking circuit to improve hoisting equipment and stopping precision.
- Use a quick-braking circuit when a phase-advancing capacitor is mounted.
- For information on electromagnetic contactors and varistors for quick-braking circuits, see Table 6-4 on P33.
- For quick-braking circuits, gang the brake circuit's electromagnetic contactor to the motor's electromagnetic contactor.

- Switch the above SW for plugging rotation. (Immediate plugging rotation is not allowed.)
- Rectifier and capacitor are placed separately. (Rectifier and capacitor are not waterproof.)
- Do not open the cap of a waterproof/dust-proof box (see P17). Otherwise, waterproof/dust-proof effects will be lost and electric shock, damage, and fire may result.

6-6 Points to Note when Using a Quick Braking Circuit

When using brakes with quick braking circuits, take note of the following items.

- Connect a varistor (protection element) to protect the quick braking circuit contact points from surge voltage generated by the brake action.
- Wire the quick braking circuit contact points to the brake power source secondary side contacts. Contact points might not be protected.
- For information on using an alternating current electromagnetic contactor for contact points for quick braking circuits, see Table 6-4.

If multiple contact points are required, note the following issues.

- Connect electromagnetic contactor contact points in serial. (See Figure 6-3)
- Connect the varistor (VR) as close to the unit as possible. (See Figure 6-3)

Table 6-4. Type for parts recommended when using a quick braking circuit (when using an alternating current electromagnetic contactor).

<table>
<tr><th rowspan="2">AC Voltage</th><th rowspan="2">Brake type</th><th colspan="4">Recommended Contactor Type</th><th colspan="2">Recommended Contactor</th><th colspan="4">Recommended Varistor (For Protecting Contactor Contact Points)</th></tr>
<tr><th colspan="2">Manufactured by Fuji Electric FA Components & Systems Co., Ltd.</th><th colspan="2">Manufactured by Mitsubishi Electric Corporation</th><th colspan="2">Contact Point Capacity (DC-13 class)</th><th>Varistor type</th><th>Maximum Allowable Circuit Voltage Circuit Voltage</th><th>Varistor Voltage</th><th>Power Rating Power</th></tr>
<tr><td rowspan="8">200V
220V</td><td>MB-003</td><td rowspan="8">SC-05</td><td rowspan="6">Serial contact points: 1 (0.7A)</td><td rowspan="8">S-N11 or S-N12</td><td rowspan="6">Serial contact points: 1 (1.2A)</td><td rowspan="8">DC110V</td><td rowspan="2">Minimum 0.4A</td><td rowspan="4">TND07V-471KB00AAA0</td><td rowspan="8">AC300V</td><td rowspan="8">470V (423-517V)</td><td rowspan="4">0.25W</td></tr>
<tr><td>MB-005</td></tr>
<tr><td>FB-01A1</td><td rowspan="2">Minimum 0.5A</td></tr>
<tr><td>FB-02A1</td></tr>
<tr><td>FB-05A1</td><td rowspan="2">Minimum 0.7A</td><td rowspan="2">TND10V-471KB00AAA0</td><td rowspan="2">0.4W</td></tr>
<tr><td>FB-1D</td></tr>
<tr><td>FB-1E</td><td rowspan="2">Serial contact points: 2 (3.0A)</td><td rowspan="2">Serial contact points: 2 (3.0A)</td><td rowspan="2">Minimum 1.5A</td><td rowspan="2">TND14V-471KB00AAA0</td><td rowspan="2">0.6W</td></tr>
<tr><td>FB-2E</td></tr>
<tr><td>FB-3E</td></tr>
<tr><td rowspan="8">400V
440V</td><td>MB-003</td><td rowspan="8">SC-05</td><td rowspan="2">Serial contact points: 1 (0.25A)</td><td rowspan="8">S-N11 or S-N12</td><td rowspan="4">Serial contact points: 2 (0.5A)</td><td rowspan="8">DC220V</td><td rowspan="2">Minimum 0.2A</td><td>–</td><td>–</td><td>–</td><td>–</td></tr>
<tr><td>MB-005</td><td rowspan="4">TND10V-821KB00AAA0</td><td rowspan="8">AC510V</td><td rowspan="8">820V (738-902V)</td><td rowspan="4">0.4W</td></tr>
<tr><td>FB-01A1</td></tr>
<tr><td>FB-02A1</td><td rowspan="2">Serial contact points: 2 (0.4A)</td><td rowspan="2">Minimum 0.3A</td></tr>
<tr><td>FB-05A1</td></tr>
<tr><td>FB-1D</td><td rowspan="4">Serial contact points: 3 (2.0A)</td><td rowspan="4">Serial contact points: 3 (2.0A)</td><td rowspan="2">Minimum 0.5A</td><td rowspan="2">TND14V-821KB00AAA0</td><td rowspan="2">0.6W</td></tr>
<tr><td>FB-1E</td></tr>
<tr><td>FB-2E</td><td rowspan="2">Minimum 1.0A</td><td rowspan="2">TND20V-821KB00AAA0</td><td rowspan="2">1.0W</td></tr>
<tr><td>FB-3E</td></tr>
</table>

- This recommended contactor type is for Fuji Electric FA Components & Systems Co., Ltd. and Mitsubishi Electric Corporation contactors. Products from other manufacturers are also allowable if they have equivalent capabilities.
- Recommended contactor contact point capacity indicates the case where durability regarding electronic opening and closing (service life) is approximately 2 million times.
- Of the recommended contactors, the Mitsubishi Electric Corporation S-N11 has one auxiliary contact point; the S-N18 has none. This applies if, for inverter drive or other reasons, two or more auxiliary contact points are required. (Other connectors in Table 6-4 have two or more auxiliary contact points.)
- This recommended varistor type is for Nippon Chemi-Con Corporation varistors. Products from other manufacturers are also allowable if they have equivalent capabilities.
- A varistor for a single phase 100V is the same as the one for a single phase 200V.

Figure 6-3 Examples of Contact Point Connections with Quick-Braking Circuits

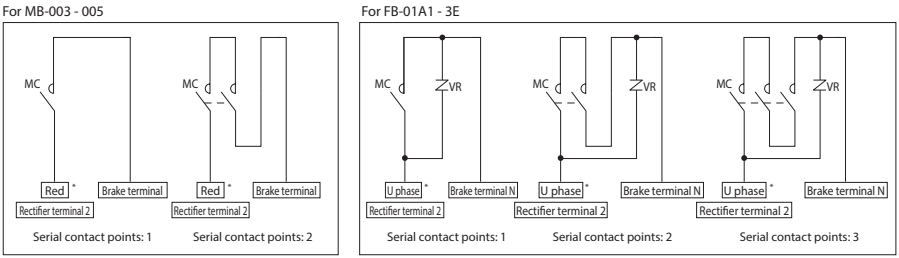

* For inverter drives, connect to the R phase (power source side).

Note: A motor with the indoor type MB brake does not have a rectifier's terminal 2 and a varistor (VR).

6-7 Capacitor Specification of Single Phase Power Source Motor

Table 6-5 Capacitor Run 40 - 90W (Accessory)

Motor		Capacitor for Operation	
Voltage (V)	Capacity (W)	Capacity range (μF)	Pressure Resistance (V)
100	40	14	220
	60	18	
	90	25	
200	40	3.5	440
	60	4.5	
	90	6.5	

Table 6-6 Capacitor Starting 0.1 - 0.2kW (Motor Frame Fixed)

Motor		Capacitor for Starting	
Voltage (V)	Capacity (kW)	Capacity range (μF)	Pressure Resistance (V)
100	0.1	100	125
	0.2	200	

Table 6-7 Capacitor Starting Capacitor Run 0.1 - 0.4kW (Built in Terminal Box)

Motor		Capacitor for Starting		Capacitor for Operation	
Voltage (V)	Capacity (kW)	Capacity range (μF)	Pressure Resistance (V)	Capacity range (μF)	Pressure Resistance (V)
100/200	0.1	60	125	10	230
	0.2	100		20	
	0.4	200		40	

⚠ DANGER

- Do not approach or touch rotating parts (output shaft, etc.) during operation; otherwise loose clothing may became caught in these rotating parts and cause serious injury or death.
- When the power supply is interrupted, be sure to turn off the power switch. Unexpected resumption of power may cause electric shock, personal injury, or damage to the equipment.
- Do not operate the unit with the terminal box cover removed. Return the terminal box cover to the original position after maintenance, otherwise, electric shock may result.
- Do not operate the machine while the brake is released by the manual brake release bolt; otherwise, falling, going out of control, or damage to the equipment may result.
- Do not use a single phase power source motor for applications in the maximum torque or more is loaded on the motor; otherwise, reverse overdrive may result.
- To reverse a single phase power source motor other than a reversible motor, be sure to stop the motor then reverse it; otherwise, overdrive may result with the rotation direction unchanged.

⚠ CAUTION

- Do not put fingers or foreign objects into the opening of the gearmotor; otherwise, electric shock, injury, fire, or damage to the equipment may result.
- The gearmotor becomes very hot during operation. Be careful not to touch with hands or body. Otherwise, burns may result.
- If any abnormality occurs during operation, stop operation immediately; otherwise, electric shock, personal injury, or fire may result.
- Do not operate the unit in excess of the load rating; otherwise, personal injury, or damage to the equipment may result.
- Do not touch the current-carrying part of a capacitor for starting a single phase motor until it is fully discharged; otherwise, electric shock may result.

7-1 Items to Check Before Operation

After installation and wiring are completed, check the following items before operating.

- Is the wiring correct?
- Is the unit properly coupled with the driven machine?
- Are mounting bolts tightened firmly?
- Is the direction of rotation as required?

After confirming these items, operate without a load and gradually apply a load. Check the items shown in Table 7-1.

7-2 Items to Check During Operation

Table 7-1 Items to Check During Operation

Is abnormal sound or vibration generated?	- Is the housing deformed because the installation surface is not flat? - Is insufficient rigidity of the installation base generating resonance? - Is the shaft center aligned with the driven machine? - Is the vibration of the driven machine transmitted to the gearmotor?
Is the surface temperature abnormally high?	- Is the voltage rise or drop substantial? - Is the ambient temperature too high? - Does the current flowing to the gearmotor exceed the rated current shown on the nameplate?

If any abnormalities are found, immediately stop operation and contact the nearest authorized service station.

7-3 Brake Torque and Activation Delay Time

The table below shows standard specification brake types, their brake torque, and their relationship to brake activation delay time.

Table 7-2 Brake Torque and Activation Delay Time

Brake type	Motor Capacity (kW)							Brake activation delay time (s)		
	3-phase Motor	Premium-efficiency, 3-phase motor	3-phase motor for Inverter	Premium-efficiency, 3-phase motor for Inverter	High-efficiency, 3-phase motor	Single phase Motor	Brake Torque (Dynamic friction torque) (N·m)	Normal braking circuit (Simultaneous turn-off circuit)	Premium-efficiency, Normal braking circuit (Separate turn-off circuit)	Quick-braking circuit
MB-003	40W	-	-	-	-	40W	0.3	0.07 - 0.12	0.03 - 0.06	0.03 - 0.06
MB-005	60W 90W	-	-	-	-	60W 90W	0.5			
FB-01A1	0.1	-	-	-	-	-	1.0	0.15-0.2	0.08 - 0.12	0.015 - 0.02
FB-02A1	0.2	-	0.1	-	-	-	2.0			
FB-05A1	0.4	-	0.2	-	0.2	-	4.0	0.1-0.15	0.03 - 0.07	0.01 - 0.015
FB-1D	0.55	-	0.4	-	0.4	-	7.5	0.2-0.3	0.1-0.15	0.01 - 0.02
FB-1E	-	0.75	-	0.75	-	-	7.5	0.25 - 0.45	0.15 - 0.25	0.01 - 0.03
FB-2E	-	1.5	-	1.5	-	-	15	0.35 - 0.55	0.15 - 0.25	
FB-3E	-	2.2	-	2.2	-	-	22	0.75 - 0.95	0.4-0.5	0.02 - 0.04

Note: 1. Brake type may differ depending on specification. Check the nameplate.

2. Brake torque will change according to operating environment, operating conditions, the condition of the friction surface, etc. In particular, brake torque may not be at the prescribed level for initial operation, and after a long period of inactivity. In such a case turn the brake on and off under as light load as possible to contact the brake's friction surfaces.

3. Brake activation delay time will change according to the brake's wiring circuit. Select the optimum circuit for the application.

⚠ DANGER

- Do not handle the unit when cables are live. Be sure to turn off the power when operating on the unit; otherwise, electric shock may result.
- Do not approach or touch any rotating parts (output shaft, etc.) during run-time maintenance or inspection of the unit; loose clothing may become caught in these rotating parts and cause serious injury or death.
- For explosion proof motor, customers must not disassemble or modify; otherwise, explosion, ignition, electric shock, or damage to the equipment may result.
- For explosion proof motor, the lead-in condition shall conform to the facilities electrical codes, extension regulations, and explosion proofing guide, as well as the maintenance manual; Additionally, do not open the terminal box cover while operating. otherwise, explosion, ignition, electric shock, or damage to the equipment may result.
- Do not operate the machine while the brake is released by the manual brake release bolt; otherwise, falling, going out of control, or damage to the equipment may result.

⚠ CAUTION

- Do not put fingers or foreign objects into the opening of the gearmotor; otherwise, electric shock, injury, fire, or damage to the equipment may result.
- The gearmotor becomes very hot during operation. Do not touch the product with bare hands. Otherwise, burns may result.
- Do not touch the terminals when measuring insulation resistance; otherwise, electric shock may result.
- Do not operate the unit without a safety cover (removed during inspection) in place to shield rotating parts; otherwise loose clothing may became caught in these rotating parts and cause serious injury or death.
- Promptly identify and correct, according to instructions in this maintenance manual, any abnormalities observed during operation. Do not operate until the cause for the abnormality is understood, and the abnormality is corrected.
- Do not operate damaged gearmotors; otherwise, injury, fire, or damage to the equipment may result.
- We cannot assume any responsibility for damage or injury resulting from an unauthorized modification by a customer, as it is outside the scope of the warranty.
- Dispose of gearmotor lubricant as general industrial waste.
- For explosion proof motor, when measuring the insulation resistance, confirm that there is no gas or explosive vapor in the vicinity in order to prevent explosion or ignition.
- Changing brake linings requires experience. Consult with the nearest authorized service station.
- Brake torque will change with operation environment and conditions, the condition of the friction surface, and other factors. In particular, brake torque may not be at the prescribed level for initial operation, and after a long period of inactivity. In such a case turn the brake on and off under as light load as possible to contact the brake's friction surfaces.

8-1. Daily Inspection

Make certain to carry out daily inspections in accordance with Table 8-1. Neglecting inspections is a source of trouble.

Table 8-1. Daily Inspection

Inspection item	Inspection detail
Current value	Is the current no greater than the rated value shown on the nameplate?
Noise	Are there unusual noises, or are there extreme changes in the noises?
Vibration	Is there abnormally large vibration? Are there extreme changes?
Surface temperature	Is surface temperature unusually high? Has there been a sudden rise? (Temperature rises during operation will differ according to model and type. However, in case the difference between the gear unit surface temperature and the environment temperature should be approximately 40℃ , there is no particular trouble if fluctuation is slight.)
Grease leaks	Is grease leaking from the gear unit? Are the oil seal sliding surfaces corroded?
Mounting bolts	Are the mounting bolts loose?
Chain, V-belt	Are the chain or V-belt loose?

- For a motor with the capacity of 90W or less, the current value of the motor may stay high temporarily due to increased viscosity of grease for the gear unit and motor bearing grease during cold winter. There are no concerns of burnout of a motor even if the current may exceed the rated current value for 5 to 15 minutes in a no load operation.
  Considerations may be needed for the current value setting of an overload protection device, including an electronic thermal relay and selection of an inverter capacity range. Contact us for details.
- If any problems are found in a daily inspection, follow "9. Troubleshooting" (on P56 and 57) to take appropriate actions. If these actions do not remedy the issue, immediately contact the nearest authorized service station.

8-2 Main Unit Maintenance

- Because long-life grease is used for gear, it can run for a long time without replenishment, maintenance with disassembly after approximately 20,000 hours or 3 to 5 years will further increase lifetime. Contact the nearest authorized service station regarding maintenance with disassembly.
- Oil seals have a lifetime. During long use natural degradation and frictional wear will reduce effectiveness. Operating conditions and ambient environment will cause lifetime to widely vary. Given normal operation, (uniform load, running 10 hours per day, normal temperature) as a guideline it is recommended to change them every 1 to 3 years. If the sliding surfaces of oil seals or V-rings show signs of wear or corrosion, replace them with new ones. Sliding surfaces are made of carbon steel, so rain water, condensation and other factors could cause rust to form and spread. Because this could lead to oil seal damage, take on-going rust prevention measures.Please consult with the nearest maintenance shop for the replacement of oil seal or V-ring.
- If stop and start are frequent, mounting bolts (or nuts) may come loose. Periodically check for looseness as this is a source of miss-alignment, oil leakages, and load unbalance.

8-3 Brake Maintenance and Inspection

⚠ DANGER

- Do not handle the unit when cables are live. Be sure to turn off the power when operating on the unit; otherwise, electric shock may result.
- When using for lifting, do not release the brake while a load is suspended; otherwise it could fall, causing an accident.
- Do not operate the machine while the brake is released by the manual brake release bolt; otherwise, falling, going out of control, or damage to the equipment may result.
- Before operation turn power on and off to check brake action; otherwise falling or running out of control could occur.
- Do not bring water or oils in contact with the brake. Brake torque degradation could cause falling or running out of control.

⚠ CAUTION

- After gap inspection and adjustment do not operate with the fan cover removed. otherwise loose clothing may became caught in these rotating parts and cause serious injury or death.
- Changing brake linings requires experience. Consult with the nearest authorized service station.

Given normal operation conditions, brake mechanical lifetime is quite long at 2 million times. These conditions include the moment of inertia for the load being no greater than the moment of inertia for the brakemotor. However, please periodically inspect the brake gap (G). The brake lining wears after long hours of running time, making it impossible for the brake to release. When 2 million times is exceeded, wear and damage to mechanical parts may cause dropping or overdrive problems.

8-4 Brake Construction and Gap Inspection and Adjustment

- The brake is spring activated (power-off type).
- The brake lining wears after long hours of operating the brake, making it impossible for the brake to release. Therefore please periodically inspect the brake gap (G).
- If on inspection the gap is close to the limit, adjust the gap.
- In FB brakes a shock absorber is inserted between the stationary core and the armature plate to reduce the noise that results from the braking action.
  When inspecting be careful that the gap gauge, other measuring tool or anything else does not damage the shock absorber or cause it to fall out.
  There is danger that if the shock absorber is damaged or falls out, brake noise will increase and the brake will not function properly.

Table 8-2 Pages Containing Information on Brake Construction and Gap Inspection and Adjustment

Brake type	Indoor	Outdoor/waterproof
MB-003, 005	P35	P41
FB-01A1, 02A1, 05A1	P36	P42
FB-1D	P37	P43
FB-1E	P38	P44
FB-2E	P39	P45
FB-3E	P40	P46

Please refer to P53 for the way to remove and attach one-touch release lever.

■ MB-003, 005 (Indoor type)

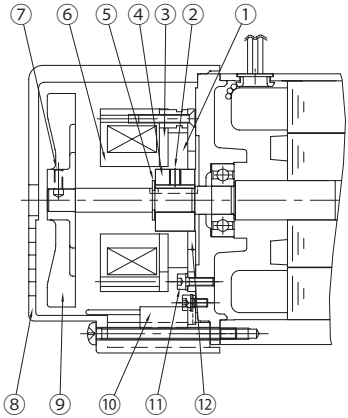

Figure 8-1

Code	Part Name
1	Brake Lining
2	Boss set screw
3	Armature plate
4	Boss
5	Shaft-retaining E-ring
6	Stationary core
7	Fan set screw
8	Cover
9	Fan (mounted for single phase 60 and 90W only)
10	Rectifier
11	Brake mounting bolt
12	Fixed plate

- Gap Inspection

(1) Remove cover [8].

(2) Insert a gap gauge between the stationary core [6] and the armature plate [3], and measure the gap. Measure in 3 locations around the circumference.

(3) The brake lining must be replaced if the gap value is close to the limit.
(Gap adjustment is not allowed.)

Gap Value G (mm)	
Required value (original value)	Limit value
0.05 - 0.25	0.35

■ FB-01A1, 02A1, 05A1 (Indoor Type)

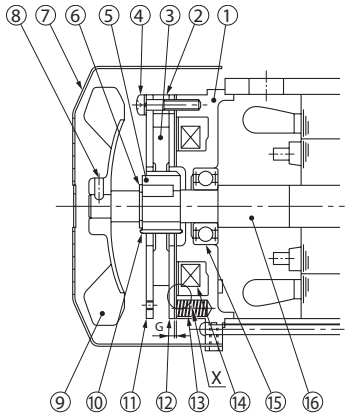

Figure 8-2

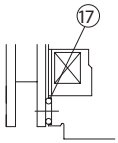

Details on Part X

Code	Part Name
1	Stationary core
2	Spacer
3	Brake Lining
4	Attachment bolt
5	Boss
6	Shaft-retaining C-ring
7	Cover
8	Fan set screw
9	Fan
10	Leaf spring
11	Fixed plate
12	Armature plate
13	Spring
14	Electromagnetic coil
15	Bearing
16	Motor shaft
17	Shock absorber

Note: FB-01A1 of a 3-phase motor 0.1kW does not have [8] and [9].

- Gap Inspection

(1) Remove the cover [7].
(2) Insert a gap gauge between the stationary core [1] and the armature plate [12], and measure the gap. Measure in 3 locations around the circumference.
(3) Adjustment is required if the gap value is close to the limit.

Gap Value G (mm)	
Required value (original value)	Limit value
0.2 - 0.35	0.5

- Gap Adjustment

(1) Remove the cover [7].
(2) Loosen the fan set screw [8] and remove the fan [9].
(3) Slightly loosen the attachment bolts [4] and rotate the fixed plate [11] counterclockwise, as far as it will go. Then tighten the attachment bolts [4]. After tightening, measure the gap (G) and check to see if the gap value is between the required value and the limit. (This operation will reduce the gap by 0.3 mm.)
(4) Turn the power on and off to check brake action.
(5) Attach the fan [9] and cover [7]. Use a fan set screw [8] coated with Three Bond TB2365 (Sumitomo part number EW444WW-01), and tighten to a torque of 0.3 - 0.5 N·m.

Note: If the optional brake release bolt is installed, disassemble after removing the release bolt.

■ FB-1D (Indoor Type)

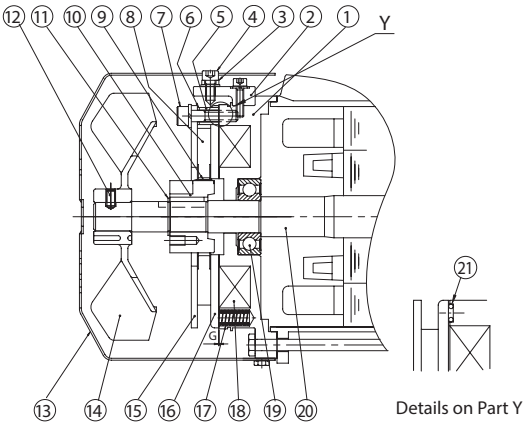

Figure 8-3

Code	Part Name
1	Stationary core
2	Brake release
3	Manual release protection spacer
4	Brake release bolt
5	Spacer
6	Gap adjusting shims
7	Attachment bolt
8	Brake Lining
9	Leaf spring
10	Boss
11	Shaft-retaining C-ring
12	Fan set screw
13	Cover
14	Fan
15	Fixed plate
16	Armature plate
17	Spring
18	Electromagnetic coil
19	Bearing
20	Motor shaft
21	Shock absorber

- Gap Inspection

(1) Remove the brake release bolt [4] and the manual release prevention spacer [3].
(2) Remove the cover [13].
(3) Insert a gap gauge between the stationary core [1] and the armature plate [16] and measure the gap. Measure in 3 locations around the circumference.
(4) Adjustment is required if the gap value is close to the limit. (Gap adjustment shim thickness is approximately 0.2 - 0.25 mm. Adjustment cannot be made at a lower value.)

Gap Value G (mm)	
Required value (original value)	Limit value
0.3 - 0.4	0.6

- Gap Adjustment

(1) Remove the brake release bolt [4] and the manual release prevention spacer [3].
(2) Remove the cover [13].
(3) Remove the fan set screw [12] and remove the fan [14].
(4) Loosen the attachment bolts [7] and remove the spacers [5], gap adjustment shims [6], attachment bolts [7] and fixed plate [15] as a set. When removing the attachment bolts [7] only, make sure not to fall the gap adjustment shims [6] or the shock absorber [21].
(5) The gap adjustment shims [6] have a thickness of 0.2 - 0.25 mm. Reduce the number of shims according to the wear conditions, then reassemble the spacers [5], gap adjustment shims [6], attachment bolts [7] and the fixed plate [15] as a set.
(6) Check the gap G, and readjust the shims if there is a large difference between the gap and the required value.
(7) Turn the power on and off to check brake action.
(8) Attach the fan [14], fan set screw [12] and cover [13]. Use a fan set screw [12] coated with Three Bond TB2365 (Sumitomo part number EW445WW-01), and tighten to a torque of 0.85 - 1.05 N·m. Finally, attach the brake release bolt [4] and the manual release prevention spacer [3].

■ FB-1E (Indoor Type)

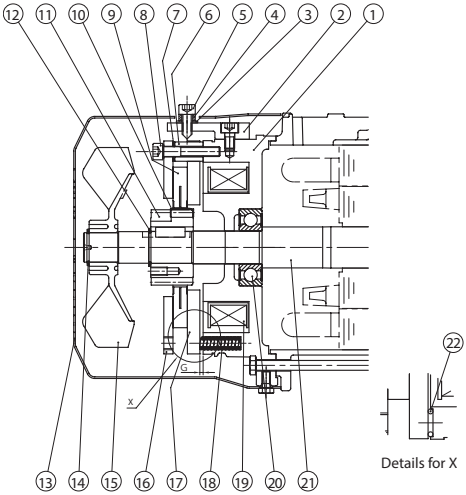

Figure 8-4

Code	Part Name
1	Stationary core
2	Brake release
3	Seal washer
4	Manual release prevention spacer
5	Brake release bolt
6	Spacer
7	Gap adjusting shims
8	Attachment bolt
9	Brake Lining
10	Leaf spring
11	Boss
12	Shaft-retaining C-ring
13	Cover
14	Shaft-retaining C-ring
15	Fan
16	Fixed plate
17	Armature plate
18	Spring
19	Electromagnetic coil
20	Ball bearings
21	Motor shaft
22	Shock absorber

- Gap Inspection

Gap Value G (mm)	
Required value (original value)	Limit value
0.25 - 0.35	0.6

(1) Remove the brake release bolt [5] and the manual release prevention spacer [4].
(2) Remove the cover [13].
(3) Insert a gap gauge between the stationary core [1] and the armature plate [17] and measure the gap. Measure in 3 locations around the circumference.
(4) Adjustment is required if the gap value is close to the limit.
(Gap adjustment shim thickness is approximately 0.2 - 0.25 mm. Adjustment cannot be made at a lower value.)

- Gap Adjustment

(1) Remove the brake release bolt [5] and the manual release prevention spacer [4].
(2) Remove the cover [13].
(3) Remove the shaft-retaining C-ring [14], and remove the fan [15].
(4) Loosen the attachment bolts [8] and remove the spacers [6], gap adjustment shims [7], attachment bolts [8] and fixed plate [16] as a set. When removing the attachment bolts [8] make certain not to omit the gap adjustment shims [7] or the shock absorber [22].
(5) The gap adjustment shims [7] have a thickness of 0.2 - 0.25 mm. Reduce the number of shims according to the wear conditions, then reassemble the spacers [6], gap adjustment shims [7], attachment bolts [8] and the fixed plate [16] as a set.
(6) Check the gap G, and readjust the shims if there is a large difference between the gap and the required value.
(7) Turn the power on and off to check brake action.
(8) Attach the fan [15], shaft-retaining C-ring [14] and cover [13].
(9) Finally, attach the brake release bolt [5] and the manual release prevention spacer [4].

■ FB-2E (Indoor Type)

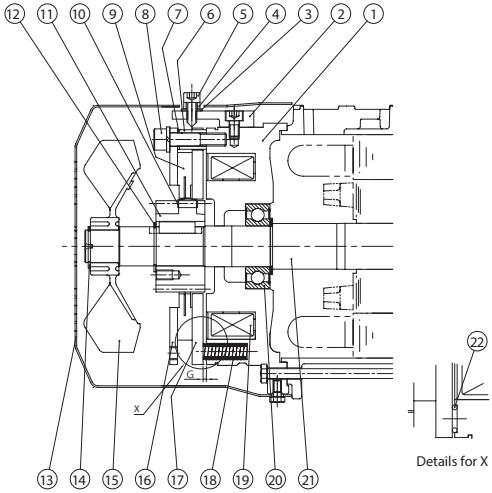

Figure 8-5

Code	Part Name
1	Stationary core
2	Brake release
3	Seal washer
4	Manual release prevention spacer
5	Brake release bolt
6	Spacer
7	Gap adjusting shims
8	Attachment bolt
9	Brake Lining
10	Leaf spring
11	Boss
12	Shaft-retaining C-ring
13	Cover
14	Shaft-retaining C-ring
15	Fan
16	Fixed plate
17	Armature plate
18	Spring
19	Electromagnetic coil
20	Ball bearings
21	Motor shaft
22	Shock absorber

- Gap Inspection

Gap Value G (mm)	
Required value (original value)	Limit value
0.25 - 0.35	0.75

(1) Remove the brake release bolt [5] and the manual release prevention spacer [4].
(2) Remove the cover [13].
(3) Insert a gap gauge between the stationary core [1] and the armature plate [17] and measure the gap. Measure in 3 locations around the circumference.
(4) Adjustment is required if the gap value is close to the limit.
(Gap adjustment shim thickness is approximately 0.35 - 0.45mm. Adjustment cannot be made at a lower value.)

- Gap Adjustment

(1) Remove the brake release bolt [5] and the manual release prevention spacer [4].
(2) Remove the cover [13].
(3) Remove the shaft-retaining C-ring [14], and remove the fan [15].
(4) Loosen the attachment bolts [8] and remove the spacers [6], gap adjustment shims [7], attachment bolts [8] and fixed plate [16] as a set. When removing the attachment bolts [8] make certain not to omit the gap adjustment shims [7] or the shock absorber [22].
(5) The gap adjustment shims [7] have a thickness of 0.35 - 0.45mm. Reduce the number of shims according to the wear conditions, then reassemble the spacers [6], gap adjustment shims [7], attachment bolts [8] and the fixed plate [16] as a set.
(6) Check the gap G, and readjust the shims if there is a large difference between the gap and the required value.
(7) Turn the power on and off to check brake action.
(8) Attach the fan [15], shaft-retaining C-ring [14] and cover [13].
(9) Finally, attach the brake release bolt [5] and the manual release prevention spacer [4].

■ FB-3E (Indoor Type)

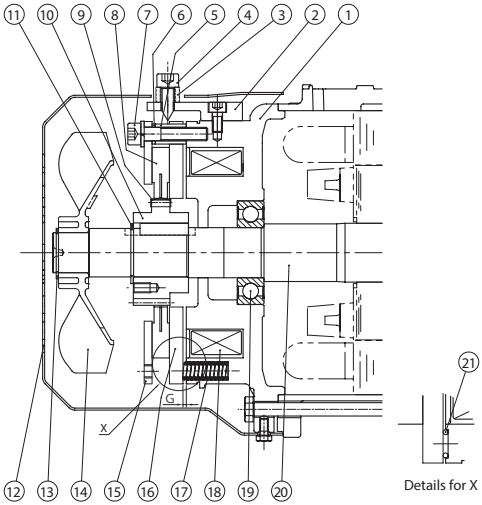

Figure 8-6

Code	Part Name
1	Stationary core
2	Brake release
3	Manual release prevention spacer
4	Brake release bolt
5	Spacer
6	Gap adjusting shims
7	Attachment bolt
8	Brake Lining
9	Leaf spring
10	Boss
11	Shaft-retaining C-ring
12	Cover
13	Shaft-retaining C-ring
14	Fan
15	Fixed plate
16	Armature plate
17	Spring
18	Electromagnetic coil
19	Ball bearings
20	Motor shaft
21	Shock absorber

- Gap Inspection

Gap Value G (mm)	
Required value (original value)	Limit value
0.25 - 0.35	0.85

(1) Remove the brake release bolt [4] and the manual release prevention spacer [3].
(2) Remove the cover [12].
(3) Insert a gap gauge between the stationary core [1] and the armature plate [16] and measure the gap. Measure in 3 locations around the circumference.
(4) Adjustment is required if the gap value is close to the limit.
(Gap adjustment shim thickness is approximately 0.45 - 0.55mm. Adjustment cannot be made at a lower value.)

- Gap Adjustment

(1) Remove the brake release bolt [4] and the manual release prevention spacer [3].
(2) Remove the cover [12].
(3) Remove the shaft-retaining C-ring [13] and the fan [14].
(4) Loosen the attachment bolts [7] and remove the spacers [5], gap adjustment shims [6], attachment bolts [7] and fixed plate [15] as a set. When removing the attachment bolts [7] make certain not to omit the gap adjustment shims [6] or the shock absorber [21].
(5) The gap adjustment shims [6] have a thickness of 0.45 - 0.55 mm. Reduce the number of shims according to the wear conditions, then reassemble the spacers [5], gap adjustment shims [6], attachment bolts [7] and fixed plate [15] as a set.
(6) Check the gap G, and readjust the shims if there is a large difference between the gap and the required value.
(7) Turn the power on and off to check brake action.
(8) Attach the fan [14], shaft-retaining C-ring [13] and cover [12].
(9) Finally, attach the brake release bolt [4] and the manual release prevention spacer [3].

■ MB-003, 005 (Waterproof)

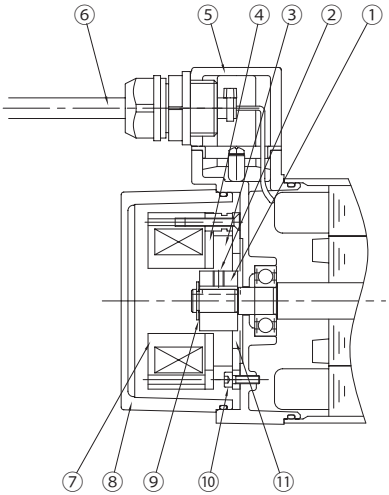

Code	Part Name
1	Boss
2	Boss set screw
3	Brake Lining
4	Armature plate
5	waterproof/dust-proof box
6	cab tire cable
7	Stationary core
8	Cover
9	Shaft-retaining E-ring
10	Brake mounting bolt
11	Fixed plate

Figure 8-7

- Gap Inspection

Gap Value G (mm)	
Required value (original value)	Limit value
0.05 - 0.25	0.35

(1) Remove the cover [8].

(2) Insert a gap gauge between the stationary core [7] and the armature plate [4], and measure the gap. Measure in 3 locations around the circumference.

(3) The brake lining must be replaced if the gap value is close to the limit. (Gap adjustment is not allowed.)

■ FB-01A1, 02A1, 05A1 (Outdoor type)

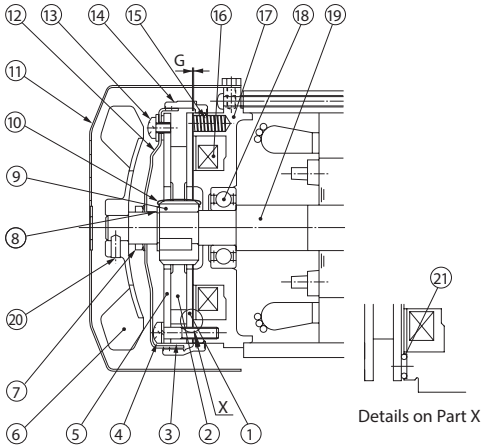

Figure 8-8

Code	Part Name
1	Armature plate
2	Brake Lining
3	Spacer
4	Attachment bolt
5	Fixed plate
6	Fan
7	V-ring
8	Shaft retaining C-ring
9	Boss
10	Leaf spring
11	Cover
12	Waterproof cover
13	Waterproof cover attachment bolts
14	Waterproof seal
15	Spring
16	Electromagnetic coil
17	Stationary core
18	Bearing
19	Motor shaft
20	Fan set screw
21	Shock absorber

Note: FB-01A1 of a 3-phase motor 0.1kW does not have [6], [7] and [20].

- Gap Inspection

(1) Remove the cover ([11].
(2) Loosen the fan set screw [20] and remove the fan [6].
(3) Remove the waterproof seal [14].
(4) Insert a gap gauge between the stationary core [17] and the armature plate [1], and measure the gap. Measure in 3 locations around the circumference.
(5) Adjustment is required if the gap value is close to the limit.

Gap Value G (mm)	
Required value (original value)	Limit value
0.2 - 0.35	0.5

- Gap Adjustment

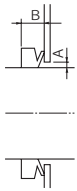

(1) Remove the cover ([11].
(2) Loosen the fan set screw [20] and remove the fan [6].
(3) Remove the waterproof seal [14].
(4) Pull off the V-ring [7].
(5) Remove the waterproof cover attachment bolts [13], and remove the waterproof cover [12].
(6) Slightly loosen the attachment bolts [4] and rotate the fixed plate [5] counter clockwise, as far as it will go. Then tighten the attachment bolts [4]. After tightening, measure the gap (G) and check to see if the gap value is between the required value and the limit. (This operation will reduce the gap by 0.3 mm.)
(7) Attach the waterproof cover [12] using the attachment bolts [13]. Attach the waterproof cover [12] so that the gap (A) between its hole and the motor shaft [19] is nearly uniform around the circumference.
(8) Clean the surface of the waterproof seal [14] to remove impurities.
(9) As shown in the construction drawings, install the waterproof seal [14] between the stationary core [17] and the waterproof cover [12]. Insert the waterproof seal [14] with its arrow mark pointing toward the load side. (Align the hole in the waterproof seal [14] for the release bolt with the position of the release bolt.) Attach the waterproof seal [14] so that its protrusion fits snuggly around the entire circumference of the groove for the stationary core [17]. Otherwise water could leak in.
(10) Turn the power on and off to check brake action.
(11) Attach the V-ring [7]. Wipe off the lip and surface near the lip of the V-ring [7], lightly coat the lip surface with grease and attach. Observe the attaching dimension (B = 4.5mm).
(12) Attach the fan [7] and cover [11]. Use a fan set screw [20] coated with Three Bond TB2365 (Sumitomo part number EW444WW-01), and tighten to a torque of 0.3 - 0.5 N·m.

Note: If the optional brake release bolt is installed, disassemble after removing the release bolt.

■ FB-1D (Outdoor type)

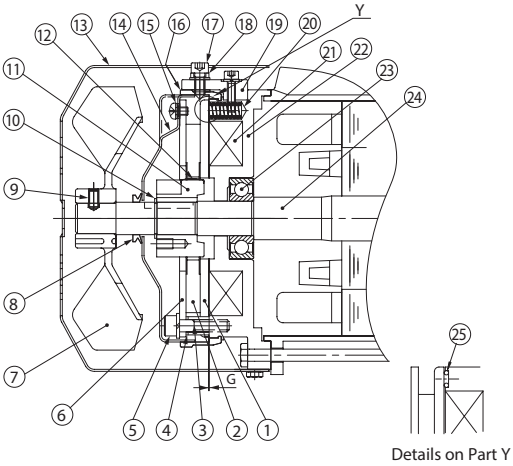

Figure 8-9

Code	Part Name
1	Armature plate
2	Brake Lining
3	Spacer
4	Gap adjusting shims
5	Attachment bolt
6	Fixed plate
7	Fan
8	V-ring
9	Fan set screw
10	Shaft retaining C-ring
11	Boss
12	Leaf spring
13	Cover
14	Waterproof cover
15	Waterproof cover attachment bolts
16	Waterproof seal
17	Brake release bolt
18	Manual release protection spacer
19	Brake release
20	Spring
21	Electromagnetic coil
22	Stationary core
23	Bearing
24	Motor shaft
25	Shock absorber

- Gap Inspection

(1) Remove the brake release bolt [17] and the manual release prevention spacer [18].
(2) Remove the cover [13].
(3) Loosen the fan set screw [9] and remove the fan [7].
(4) Remove the brake release [19]. (2 locations)
(5) Remove the waterproof seal [16].
(6) Insert a gap gauge between the stationary core [22] and the armature plate [1], and measure the gap. Measure in 3 locations around the circumference.
(7) Adjustment is required if the gap value is close to the limit.
(Gap adjustment shim thickness is approximately 0.2 - 0.25 mm.
Adjustment cannot be made at a lower value.)

Gap Value G (mm)	
Required value (original value)	Limit value
0.3 - 0.4	0.6

- Gap Adjustment

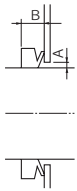

(1) Remove the brake release bolt [17] and the manual release prevention spacer [18].
(2) Remove the cover [13].
(3) Loosen the fan set screw [9] and remove the fan [7].
(4) Pull off the V-ring [8].
(5) Remove the brake release [19]. (2 locations)
(6) Remove the waterproof seal [16].
(7) Remove the waterproof cover attachment bolts [15], and remove the waterproof cover [14].
(8) Loosen the attachment bolts [5] and remove the spacers [3], gap adjusting shims [4], attachment bolts [5], fixed plate [6] as a set. When removing the attachment bolts only, make sure not to fall the gap adjustment shims [4] and the shock absorber [25].
(9) The gap adjusting shims [4] have a thickness of 0.2 - 0.25 mm. Reduce the number of shims according to the wear conditions, then reassemble the spacers [3], gap adjustment shims [4], attachment bolts [5] and the fixed plate [6] as a set.
(10) Check the gap G, and readjust the shims if there is a large difference between it and the required value.
(11) Attach the waterproof cover [14] using the attachment bolts [15]. Attach the waterproof cover [14] so that the gap (A) between its hole and the motor shaft [24] is nearly uniform.
(12) Clean the surface of the waterproof seal [16] to remove impurities.
(13) As shown in the construction drawings, install the waterproof seal [16] between the stationary core [22] and the waterproof cover [14]. Then attach the brake release [19]. Insert the waterproof seal [16] with its arrow mark pointing toward the load side. Align the hole in the waterproof seal [16] for the release bolt with the position of release bolt [17]. Attach the waterproof seal [16] so that its protrusion fits snuggly around the entire circumference of the groove for the stationary core [22]. Otherwise water could leak in.
(14) Turn the power on and off to check brake action.
(15) Attach the V-ring [8]. Wipe off the lip and surface near the lip of V-ring [8], lightly coat the lip surface with grease, and attach. Observe the attaching dimension (B = 4.5mm).
(16) Attach the fan [7] and cover [13]. Use a fan set screw [9] coated with Three Bond TB2365 (Sumitomo part number EW445WW-01), and tighten to a torque of 0.85 - 1.05 N·m. Finally, attach the brake release bolt [17] and the manual release prevention spacer [18].

■ FB-1E (Outdoor Type)

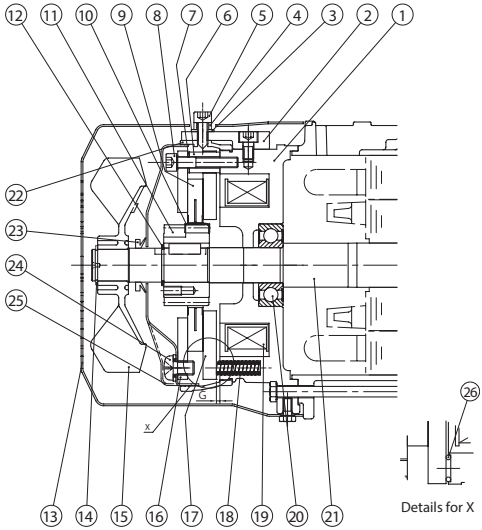

Figure 8-10

Code	Part Name
1	Stationary core
2	Brake release
3	Seal washer
4	Manual release prevention spacer
5	Brake release bolt
6	Spacer
7	Gap adjusting shims
8	Attachment bolt
9	Brake Lining
10	Leaf spring
11	Boss
12	Shaft-retaining C-ring
13	Cover
14	Shaft-retaining C-ring
15	Fan
16	Fixed plate
17	Armature plate
18	Spring
19	Electromagnetic coil
20	Ball bearings
21	Motor shaft
22	Waterproof seal
23	V-ring
24	Waterproof cover attachment bolts
25	Waterproof cover
26	Shock absorber

- Gap Inspection

(1) Remove the brake release bolt [5] and the manual release prevention spacer [4].
(2) Remove the cover [13].
(3) Remove the shaft-retaining C-ring [14], and remove the fan [15].
(4) Remove the brake release [2] (2 locations) and remove the waterproof seal [22].
(5) Insert a gap gauge between the stationary core [1] and the armature plate [17] and measure the gap. Measure in 3 locations around the circumference.
(6) Adjustment is required if the gap value is close to the limit.
(Gap adjustment shim thickness is approximately 0.2 - 0.25 mm. Adjustment cannot be made at a lower value.)

Gap Value G (mm)	
Required value (original value)	Limit value
0.25 - 0.35	0.6

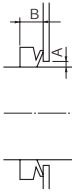

- Gap Adjustment

(1) Remove the brake release bolt [5] and the manual release prevention spacer [4].
(2) Remove the cover [13].
(3) Remove the shaft-retaining C-ring [14], and remove the fan [15].
(4) Pull off the V-ring [23].
(5) Remove the brake release [2] (2 locations) and remove the waterproof seal [22].
(6) Remove the waterproof cover attachment bolts [24], and remove the waterproof cover [25].
(7) Loosen the attachment bolts [8] and remove the spacers [6], gap adjustment shims [7], attachment bolts [8] and fixed plate [16] as a set. When removing the attachment bolts [8] make certain not to omit the gap adjustment shims [7] or the shock absorber [26].
(8) The gap adjustment shims [7] have a thickness of 0.2 - 0.25 mm. Reduce the number of shims according to the wear conditions, then reassemble the spacers [6], gap adjustment shims [7], attachment bolts [8] and the fixed plate [16] as a set.
(9) Check the gap G, and readjust the shims if there is a large difference between it and the required value.
(10) Attach the waterproof cover [25] using the waterproof cover attachment bolts [24]. At this time align the cutout area on the side of the waterproof cover [25] with the brake release bolt [5]. Attach the waterproof cover [25] so that the gap (A) between its hole and the motor shaft [21] is nearly uniform.
(11) Clean the surface of the waterproof seal [22] to remove impurities.
(12) As shown in the construction drawings, install the waterproof seal [22] between the stationary core [1] and the waterproof cover [25]. Then attach the brake release [2]. Insert the waterproof seal [22] with its arrow mark pointing toward the load side. Align the hole in the waterproof seal [22] for the brake release bolt with the position of the release bolt [5]. Attach the waterproof seal [22] so that its protrusion fits snuggly around the entire circumference of the groove for the stationary core [1]. (Be careful that the waterproof seal [22] does not meander. Otherwise water could leak in.)
(13) Turn the power on and off to check brake action.
(14) Attach the V-ring [23]. Wipe off the lip and surface near the lip of the V-ring [23], lightly coat the lip surface with grease, and attach. Observe the attaching dimension (B = 6mm).
(15) Attach the fan [15], shaft-retaining C-ring [14] and cover [13].
(16) Finally, attach the brake release bolt [5] and the manual release prevention spacer [4].

■ FB-2E (Outdoor Type)

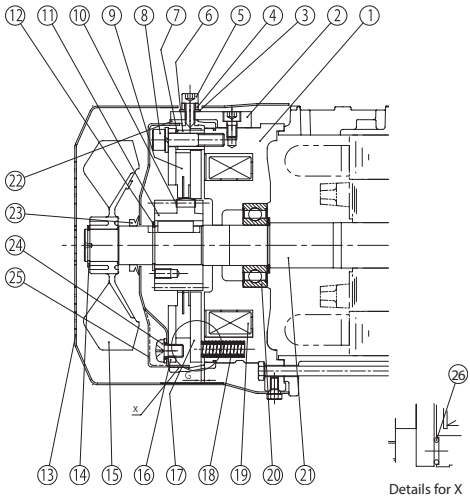

Figure 8-11

Code	Part Name
1	Stationary core
2	Brake release
3	Seal washer
4	Manual release prevention spacer
5	Brake release bolt
6	Spacer
7	Gap adjusting shims
8	Attachment bolt
9	Brake Lining
10	Leaf spring
11	Boss
12	Shaft-retaining C-ring
13	Cover
14	Shaft-retaining C-ring
15	Fan
16	Fixed plate
17	Armature plate
18	Spring
19	Electromagnetic coil
20	Ball bearings
21	Motor shaft
22	Waterproof seal
23	V-ring
24	Waterproof cover attachment bolts
25	Waterproof cover
26	Shock absorber

- Gap Inspection

(1) Remove the brake release bolt [5] and the manual release prevention spacer [4].
(2) Remove the cover [13].
(3) Remove the shaft-retaining C-ring [14], and remove the fan [15].
(4) Remove the brake release [2] (2 locations) and remove the waterproof seal [22].
(5) Insert a gap gauge between the stationary core [1] and the armature plate [17] and measure the gap. Measure in 3 locations around the circumference.
(6) Adjustment is required if the gap value is close to the limit.
(Gap adjustment shim thickness is approximately 0.35 - 0.45mm. Adjustment cannot be made at a lower value.)

Gap Value G (mm)	
Required value (original value)	Limit value
0.25 - 0.35	0.75

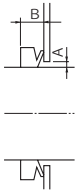

- Gap Adjustment

(1) Remove the brake release bolt [5] and the manual release prevention spacer [4].
(2) Remove the cover [13].
(3) Remove the shaft-retaining C-ring [14], and remove the fan [15].
(4) Pull off the V-ring [23].
(5) Remove the brake release [2] (2 locations) and remove the waterproof seal [22].
(6) Remove the waterproof cover attachment bolts [24], and remove the waterproof cover [25].
(7) Loosen the attachment bolts [8] and remove the spacers [6], gap adjustment shims [7], attachment bolts [8] and fixed plate [16] as a set. When removing the attachment bolts [8] make certain not to omit the gap adjustment shims [7] or the shock absorber [26].
(8) The gap adjustment shims [7] have a thickness of 0.35 - 0.45mm. Reduce the number of shims according to the wear conditions, then reassemble the spacers [6], gap adjustment shims [7], attachment bolts [8] and the fixed plate [16] as a set.
(9) Check the gap G, and readjust the shims if there is a large difference between it and the required value.
(10) Attach the waterproof cover [25] using the waterproof cover attachment bolts [24]. At this time align the cutout area on the side of the waterproof cover [25] with the brake release bolt [5]. Attach the waterproof cover [25] so that the gap (A) between its hole and the motor shaft [21] is nearly uniform.
(11) Clean the surface of the waterproof seal [22] to remove impurities.
(12) As shown in the construction drawings, install the waterproof seal [22] between the stationary core [1] and the waterproof cover [25]. Then attach the brake release [2]. Insert the waterproof seal [22] with its arrow mark pointing toward the load side. Align the hole in the waterproof seal [22] for the brake release bolt with the position of the release bolt [5]. Attach the waterproof seal [22] so that its protrusion fits snuggly around the entire circumference of the groove for the stationary core [1]. (Be careful that the waterproof seal [22] does not meander. Otherwise water could leak in.)
(13) Turn the power on and off to check brake action.
(14) Attach the V-ring [23]. Wipe off the lip and surface near the lip of the V-ring [23], lightly coat the lip surface with grease, and attach. Observe the attaching dimension (B = 6mm).
(15) Attach the fan [15], shaft-retaining C-ring [14] and cover [13].
(16) Finally, attach the brake release bolt [5] and the manual release prevention spacer [4].

■ FB-3E (Outdoor Type)

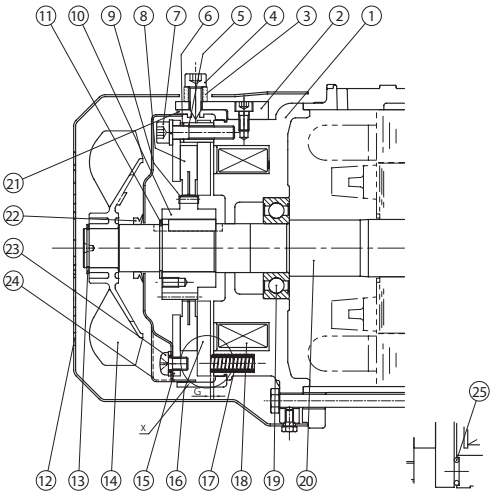

Figure 8-12

Code	Part Name
1	Stationary core
2	Brake release
3	Manual release prevention spacer
4	Brake release bolt
5	Spacer
6	Gap adjusting shims
7	Attachment bolt
8	Brake Lining
9	Leaf spring
10	Boss
11	Shaft-retaining C-ring
12	Cover
13	Shaft-retaining C-ring
14	Fan
15	Fixed plate
16	Armature plate
17	Spring
18	Electromagnetic coil
19	Ball bearings
20	Motor shaft
21	Waterproof seal
22	V-ring
23	Waterproof cover attachment bolts
24	Waterproof cover
25	Shock absorber

Gap Value G (mm)	
Required value (original value)	Limit value
0.25 - 0.35	0.85

- Gap Inspection

(1) Remove the brake release bolt [4] and the manual release prevention spacer [5].
(2) Remove the cover [12].
(3) Remove the shaft-retaining C-ring [13] and the fan [14].
(4) Remove the brake release [2] (2 locations) and remove the waterproof seal [21].
(5) Insert a gap gauge between the stationary core [1] and the armature plate [16] and measure the gap. Measure in 3 locations around the circumference.
(6) Adjustment is required if the gap value is close to the limit.
(Gap adjustment shim thickness is approximately 0.45 - 0.55mm. Adjustment cannot be made at a lower value.)

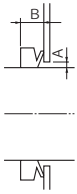

- Gap Adjustment

(1) Remove the brake release bolt [4] and the manual release prevention spacer [5].
(2) Remove the cover [12].
(3) Remove the shaft-retaining C-ring [13] and the fan [14].
(4) Pull off the V-ring [22].
(5) Remove the brake release [2] (2 locations) and remove the waterproof seal [21].
(6) Remove the waterproof cover attachment bolts [23], and remove the waterproof cover [24].
(7) Loosen the attachment bolts [7] and remove the spacers [5], gap adjustment shims [6], attachment bolts [7] and fixed plate [15] as a set. When removing the attachment bolts [7] make certain not to omit the gap adjustment shims [6] or the shock absorber [25].
(8) The gap adjustment shims [6] have a thickness of 0.45 - 0.55 mm. Reduce the number of shims according to the wear conditions, then reassemble the spacers [5], gap adjustment shims [6], attachment bolts [7] and fixed plate [15] as a set.
(9) Check the gap G, and readjust the shims if there is a large difference between it and the required value.
(10) Attach the waterproof cover [24] using the waterproof cover attachment bolts [23]. At this time align the cutout area on the side of the waterproof cover [24] with the brake release bolt [4]. Attach the waterproof cover [24] so that the gap (A) between its hole and the motor shaft [20] is nearly uniform.
(11) Clean the surface of the waterproof seal [21] to remove impurities.
(12) As shown in the construction drawings, install the waterproof seal [21] between the stationary core [1] and the waterproof cover [24]. Then attach the brake release [2]. Align the hole in the waterproof seal [21] for the brake release bolt with the position of the release bolt [4]. Attach the waterproof seal [21] so that its protrusion fits snuggly around the entire circumference of the groove for the stationary core [1]. (Be careful that the waterproof seal [21] does not meander. Otherwise water could leak in.)
(13) Turn the power on and off to check brake action.
(14) Attach the V-ring [22]. Wipe off the lip and surface near the lip of the V-ring [22], lightly coat the lip surface with grease, and attach. Observe the attaching dimension (B = 6mm).
(15) Attach the fan [14], shaft-retaining C-ring [13] and cover [12].
(16) Finally, attach the brake release bolt [4] and the manual release prevention spacer [3].

8-5 Removing and Installing One-Touch Release Lever

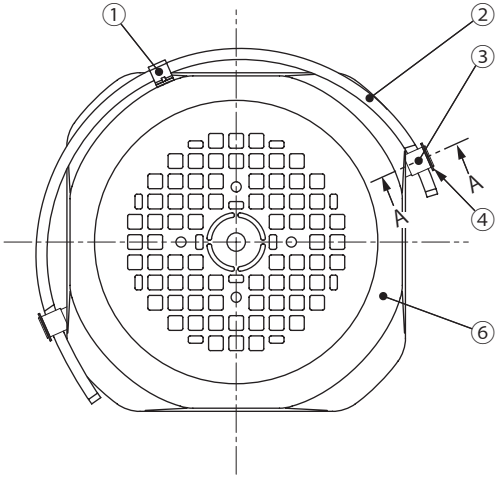

Part Number	Part Name
1	Holder
2	Release lever
3	Release pin
4	Retaining ring
5	Brake release
6	Fan cover

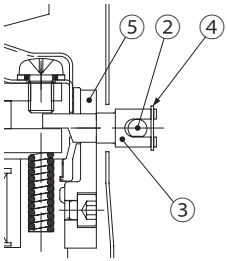

Figure 8-13

A-A

- Removing One-Touch Release Lever

(1) Removing retaining ring [4] (E-retaining ring or shaft retaining C-ring) in 2 locations.
(2) Remove release lever [2] from holder [1].
(3) Expand release lever [2] to the outside from each side of the lever in turn, removing it from release pin [3].
(Do not expand the release lever overly).
(4) Remove release pin [3].
(5) Remove fan cover [6].

- Installing One-Touch Release Lever

(1) Attach fan cover [6].
(2) Insert release pin [3] into brake release [5] with preventing pin to drop.
(3) Attach release lever [2] to U-hole of release pin [3] by extending release lever [2] to the outside from each side of the lever in turn.
(4) Attach retaining ring [4].
(5) Check that brake is released by pushing release lever [2].
(6) Fix release lever [2] to holder [1].

8-6 Changing the Brake Lining

If the following conditions occur ask the nearest authorized service station to exchange the brake linings with new ones.

(1) FB-1D, 1E - 3E

When the thickness of brake lining reaches the use limit thickness in Table 8-4

(2) MB-003, 005

When the gap reaches the limit (see P41, P47)

(3) FB-01A1 - 05A1

When the brake gap still reaches the limit after the gap adjustment (see P42, P48)

Table 8-3 Brake Lining Dimensions

Brake type	Brake Lining Dimension drawing	Original thickness t_0 (mm)	Usable Thickness Limit t_0 (mm)
MB-003, 005		7.0	–
FB-01A1, 02A1, 05A1			
FB-1D			6.0
FB-1E		8.8	7.8
FB-2E		9.0	8.0
FB-3E		10.4	8.4
FB-5E		10	6.0

- Brake torque may not be at the prescribed level during initial operation. In such case, turn motor and brake power on and off under the lightest possible load, to rub the brake lining friction surfaces.
- When changing the brake lining, replace the boss and leaf springs as a set.
- After 2 million or more cycles of operation, or after 10 years or more have passed since shipment from the factory, inspect to check whether continued operation is possible, even if the lining is not at the usable thickness limit.
- Check the following items concerning the condition of each mechanical part.
  - Are the linings split or chipped?
  - Is there any peeling or gap between the lining and the disc?
  - Does the lining spline unit exhibit any cracking, chipping, or stepped wear?
  - Is there any stepped wear on the surfaces around the stud bolts or armature plate?
- Change the brake lining, even if it has not reached the usable thickness limit, if 10 or more years have elapsed since the manufacturing date and the brake is used outdoors or in a high-humidity environment, or if it is stored or rested for a long period of time.

8-7 Changing the V-Ring and Waterproof Seal (Outdoor Type)

V-rings and waterproof seals degrade over the years, losing their waterproofing abilities. As a guideline contact the nearest authorized service station every 3 years. If the sliding surfaces of oil seals or V-rings show signs of wear or corrosion, replace them with new ones. Sliding surfaces are made of carbon steel, so rain water, condensation and other factors could cause rust to form and spread. Because this could lead to oil seal damage, take on-going rust prevention measures.

8-8 Manually Releasing the Brake

To manually release the brake with the power off, operate the brake release mechanism as shown below.

■ FB-1D, 1E - 3E (FB-01A1 - 05A1 are options)

(1) First remove the brake release bolts from the 2 opposing angles and remove the release prevention spacers. Reinsert the bolts and rotate with a hexagonal wrench to release the brake. Be careful not to over rotate the brake release bolts. (Rotate the brake release bolts while checking to see if the brake is released. (See Figures 8-14, 8-15)

(2) After releasing the brake, to return it to its original condition, for safety, return the manual release prevention spacers that were removed in (1) to their original positions. (See Figure 8-15)

(3) This table show brake release bolt sizes.

Brake type	Bolt size
FB-01A1, 02A1, 05A1, 1D	M5
FB-1E, 2E	M6
FB-3E	M8

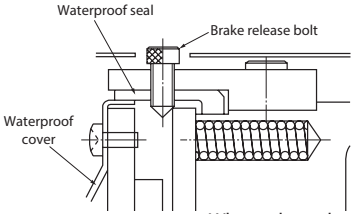

When released

Figure 8-14

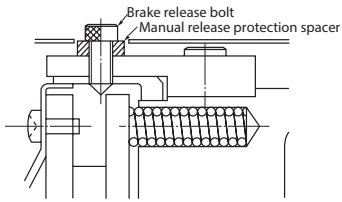

When operating

Figure 8-15

Note: Indoor types do not come with waterproof seals or waterproof covers.

■ One-Touch Release Lever Method (Optional)

All you need to do to release the brake is push the release lever over. (See Figure 8-16)

(1) To release the brake, pull the release lever out of the holder, and push it toward the load or anti-load side. (Some specifications do not allow pushing the release lever toward the load side.)
Be careful not to push the lever too far. Pushing the lever too far could damage the brake. (Push the release lever while checking to see if the brake is released.)

(2) When operating the motor make certain to return the lever to its original position and set it inside the holder. Start operation after confirming that the brake operates properly.

Note: The brake is released while the lever is tilted by a hand, and it works when the lever is released the hold.

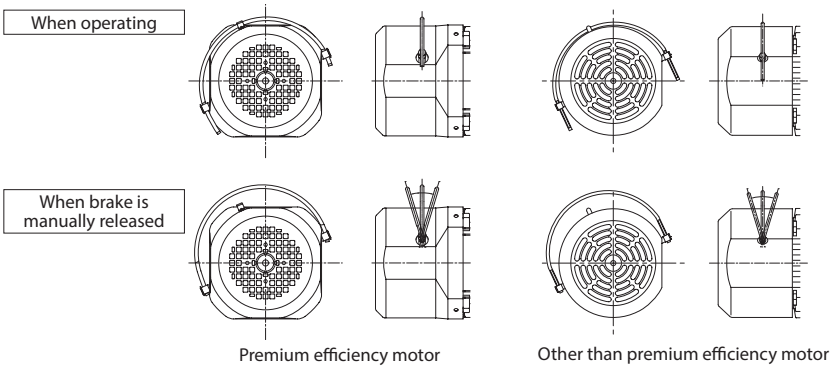

Figure 8-16

If any abnormal condition occurs, refer to Table 9-1, 9-2 and promptly take appropriate measures. If these actions do not remedy the issue, immediately contact the nearest authorized service station.

Table 9-1 Troubleshooting

Problem			Cause	Correction
The motor will not operate under no load			Power failure	Contact the electric power company.
			Defective electric circuit	Check the circuit.
			Blown fuse	Replace the fuse.
			Protective device is engaged	Fix the problem and recover.
			Load locking	Check the load and safety device.
			Poor switch contact	Adjust the contact unit.
			Motor stator coil disconnect	Confirm with authorized service station.
			Bearing damage	Confirm with authorized service station.
			Defective governor switch (0.1 - 0.4kW single phase motor)	Confirm with authorized service station.
			Damaged capacitor (single phase motor)	Confirm with authorized service station.
			3-phase is functioning as single-phase	Check the power supply with a voltmeter. Check the motor, transformer coil, contactor, fuse, etc. and repair or replace them.
			Friction surface of brake is corroded	Request brake cleaning from an authorized service station.
			Incorrect brake gap adjustment	Re-adjust brake gap. (see P42 - 52)
The motor rotates without a load but the slow speed shaft does not rotate.			Damage to gear unit due to overloading of gears, etc.	Confirm with authorized service station.
The slow speed shaft turns with no load	When a load is applied	The switch overheats	Insufficient switch capacity	Replace with specified fuse.
			Overload	Decrease the load to the specified value.
		Fuse tripping	Insufficient fuse capacity	Replace with specified fuse.
			Overload	Decrease the load to the specified value.
			Defective governor switch (0.1 - 0.4kW single phase motor)	Confirm with authorized service station.
		The speed will not increase and the motor is overheating.	Voltage drop	Contact the electric power company.
			Overload	Decrease the load to the specified value.
			Lowered capacitor capacity range (single phase motor)	Confirm with authorized service station.
			Short-circuited motor stator coil	Confirm with authorized service station.
		It stops.	The key is not inserted	Insert key.
			Bearing burnout	Confirm with authorized service station.
			Poor adjustment of protection device	Adjust the protection device.
	The motor runs in the reverse direction.		Wiring error	Change the connection.
	Fuse tripping		The lead wire is short circuited.	Confirm with authorized service station.
			Poor contact between motor and starter	Make good connection.
Excessive temperature rise			Overload	Decrease the load to the specified value.
			Voltage drop or rise	Contact the electric power company.
			Defective governor switch (0.1 - 0.4kW single phase motor)	Confirm with authorized service station.
			Lowered capacity range of a capacitor for operation (40 - 90W, 0.4kW single phase motor)	Confirm with authorized service station.
			The ambient temperature is high	Improve the ventilation method.
			Damaged bearing	Confirm with authorized service station.
			Abnormal wear of Gear Unit parts due to overload. etc.	Confirm with authorized service station.

Table 9-2 Troubleshooting

Problem		Cause	Correction
Grease leaks	Blot or a small amount of drip of trace of oil at the seal section of input/output shaft.	Grease applied to the oil seal seeps out at first.	Wipe off around the oil seal, and observe.
	Leakage of grease from input/output shaft section	Damaged oil seal or maybe damaged shaft (or collar)	Confirm with authorized service station.
	Leakage of grease from the contact surfaces of casing, etc.	Loose fastener bolts	Tighten fastener bolts correctly.
	Leakage of grease into motor	Oil seal damage	Confirm with authorized service station.
Abnormal sound Excessive vibration		Dust and foreign matter in bearings, or damaged bearings	Confirm with authorized service station.
		Gear Unit parts grinding on foreign matter	Confirm with authorized service station.
		Gear Unit parts are damaged	Confirm with authorized service station.
		Warping of casing due to uneven installation surface	Make the installation base flat or make adjustment using liners, etc.
		Resonance due to insufficient rigidity of the installation base	Reinforce the installation base to increase rigidity.
		Nonalignment of the center of axle with driven machine	Align the center of axle.
		Transmission of vibration from the driven machine	Individually operate the product to check the source of the sound.
Abnormal motor sounds		Foreign objects have entered	Confirm with authorized service station.
		Bearing damage	Confirm with authorized service station.
		Improper brake gap adjustment	Adjust the brake gap. (See P42 - 52)
		Brake lining wear	Request brake lining replacement from an authorized service station.
		Brake unit electromagnetic coil burnout	Confirm with authorized service station.
		Rectifier damage	Confirm with authorized service station.
		A leaf spring in the brake boss unit has come off or is damaged	Confirm with authorized service station.
		Defective governor switch (0.1 - 0.4kW single phase motor)	Confirm with authorized service station.
Brake is ineffective	Does not activate	Forgot to restore the brake release bolt to its original position	Restore the release bolt.
		Improper adjustment after disassembly	Request authorized service station to re-adjust.
	Slips (Braking takes a long time)	Not using the quick braking circuit	Change to quick braking circuit. (See P25 - 32)
		Foreign objects in brake lining unit, oil adhesion	Request cleaning from authorized service station.
		Brake lining wear	Adjust the brake gap. Request brake lining replacement from an authorized service station.
		Brake gap not uniform	Adjust the brake gap.
		Overload	Decrease the load to the specified value.
		Brake release bolt not sufficiently restored	Restore the release bolt.
Inverter Tripping	Overcurrent shut-off	Sudden speed changes	Increase the time for speed changes.
		Extreme load fluctuation	Decrease load fluctuation.
	Overcurrent due to ground fault	Ground fault on output side	Take measures to prevent ground fault.
	Direct current overcurrent	Short on output side	Take measures to prevent short. Inspect wiring.
	Regenerative overvoltage shut-off	Sudden speed reduction	Increase the time for speed reduction. Decrease brake frequency.
	Thermal operation	Overload	Decrease the load to the specified value.

10-1 Construction Drawings

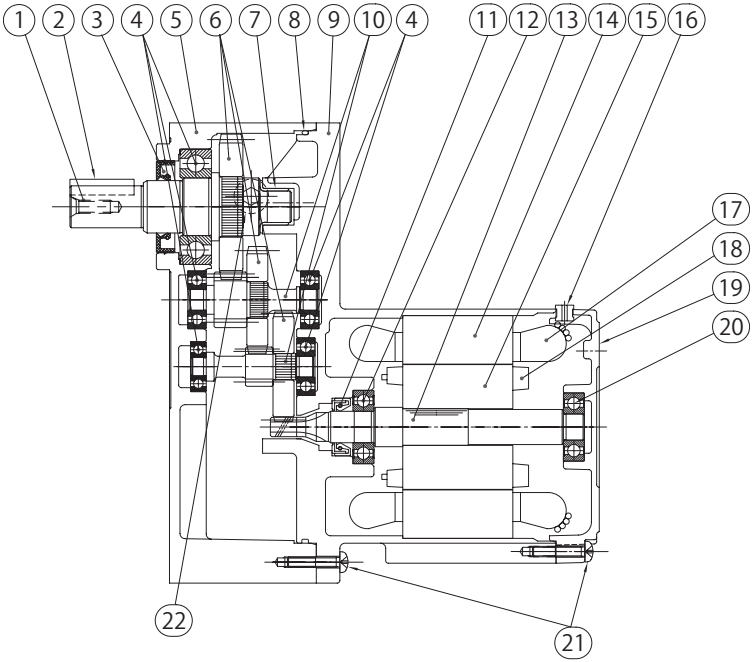

Figure 10-1 ZNFM Type 40 - 90W

Table10-1 Gearmotor, Principal Parts

Code	Part Name	Code	Part Name	Code	Part Name	Code	Part Name
1	Output shaft	7	Sliding bearing	13	Motor shaft	19	Anti-load side cover
2	Key	8	O-ring	14	Stationary core	20	Bearing
3	Oil seal	9	Motor frame	15	Rotor core	21	Bolt
4	Bearing	10	Pinion gear	16	Bushing	22	Plug
5	Casing	11	Oil seal	17	Stationary coil		
6	Gear	12	Bearing	18	Rotor conductor		

Note: The construction drawing is not a scale drawing.

10-2 Construction Drawings

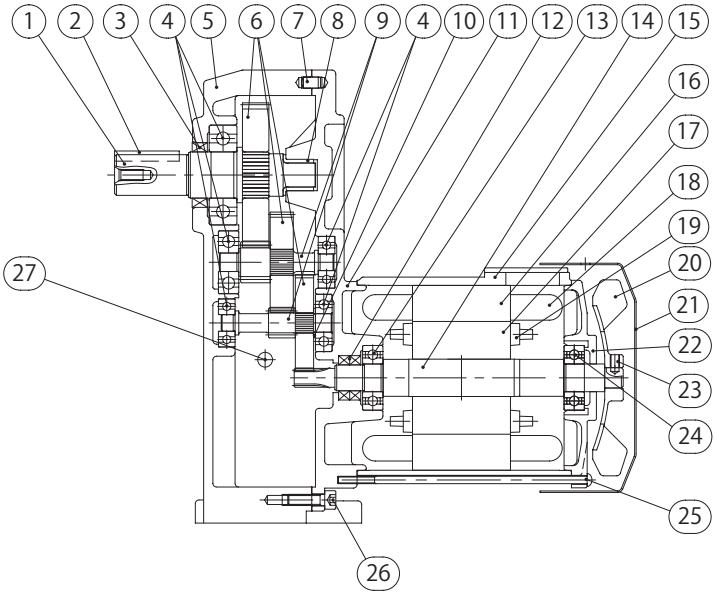

Figure 10-2 ZNHM Type 0.1 - 2.2kW

Table10-2 Gearmotor, Principal Parts

Code	Part Name	Code	Part Name	Code	Part Name	Code	Part Name
1	Output shaft	8	Sliding bearing	15	Motor frame	22	Anti-load side cover
2	Key	9	Pinion gear	16	Stationary core	23	Snap ring
3	Oil seal	10	Spacer	17	Rotor core	24	Bearing
4	Bearing	11	Motor flange bracket	18	Stationary coil	25	Bolt
5	Casing	12	Oil seal	19	Rotor conductor	26	Bolt
6	Gear	13	Bearing	20	Fan	27	Plug
7	Parallel pin	14	Motor shaft	21	Fan cover		

Note: The construction drawing is not a scale drawing.

10-3 Construction Drawings

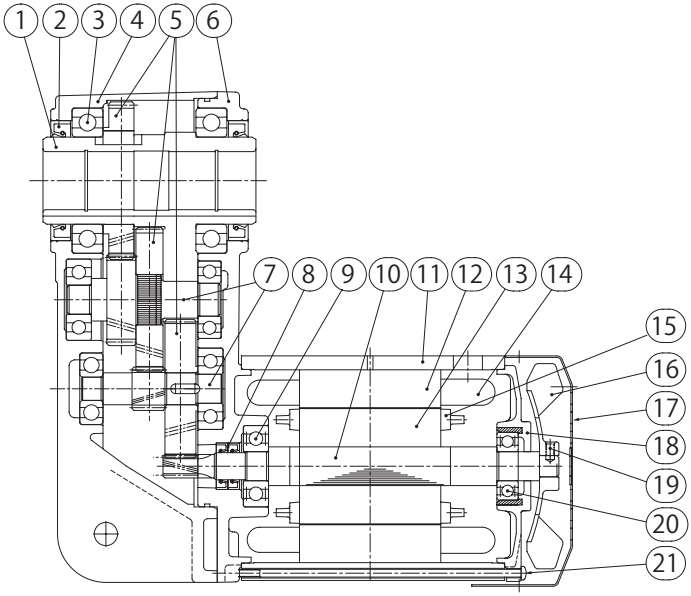

Figure 10-3 GHYM Type 0.2 - 0.75kW

Table10-3 Gearmotor, Principal Parts

Code	Part Name	Code	Part Name	Code	Part Name	Code	Part Name
1	Output shaft	7	Pinion gear	13	Rotor core	19	Snap ring
2	Oil seal	8	Oil seal	14	Stationary coil	20	Bearing
3	Bearing	9	Bearing	15	Rotor conductor	21	Bolt
4	Casing	10	Motor shaft	16	Fan		
5	Gear	11	Motor frame	17	Fan cover		
6	Cover	12	Stationary core	18	Anti-load side cover		

The scope of warranty of our delivered products is limited only to what we manufactured.
Warranty (period and description)

Warranty Period	The warranty period applies only to new products and represents 18 months after the shipment or 12 months after the actual operation, whichever is shorter.
Description	If the product failed within the warranty period, during which despite a proper mounting, connection and maintenance & administration are followed according to the maintenance manual, and the product is properly run based on the specification on the catalog or under conditions agreed separately, we will repair or provide an alternative product at our discretion for free of charge, except the exclusions below. However, as far as the product is connected with customers' other devices, we will not indemnify those expenses on dismounting from/mounting on the devices, etc. and other associated construction expenses, transportation expenses and opportunity loss and operation loss the customers suffered from, and other indirect damages.
Warranty Exclusions	The following items will be excluded from the warranty: 1. A breakdown resulting from defects in the mounting of the product and connection with other devices, etc. 2. A breakdown resulting from insufficient maintenance & administration and improper handling of the product, including a case that the product is not stored according to our defined storage manual. 3. A breakdown resulting from operation which does not fall within our specification and other operation conditions and use status we hardly can know or a failure caused by the use of lubricant which we do not recommended. 4. A breakdown resulting from defects in or special specification of devices, etc. connected by customers. (excluding disassembly for inspection and adjustment of the brake gap, for manual release of the brake, and for other purposes guided in the maintenance manual) 5. A breakdown resulting from modification or reconstruction of the product. 6. A breakdown resulting from defects in parts supplied or specified by customers. 7. A breakdown caused by inevitable force including earthquake, fire, flood disaster, salt damage, gas damage, and lightning strike, etc. 8. Warranty of natural wear and tear, abrasion, and deterioration of such relevant consumable parts as a bearing and oil seal, etc. under normal usage. 9. A breakdown caused for reasons not attributable to each of the above item.

MEMO

MEMO

Worldwide Locations

U.S.A

Sumitomo Machinery Corporation of America (SMA)
4200 Holland Blvd. Chesapeake, VA 23323, U.S.A.
TEL (1)757-485-3355 FAX (1)757-485-7490

Canada

SM Cyclo of Canada, Ltd. (SMC)
1453 Cornwall Road, Oakville, Canada ON L6J 7T5
TEL (1)905-469-1050 FAX (1)905-469-1055

Mexico

SM Cyclo de México, S.A. de C.V. (SMME)
Fresnos #201, Pocket Park Oriente, 67258 Juárez, N.L. México
TEL (52)81-8144-5130

Brazil

Sumitomo Industrias Pesadas do Brasil Ltda. (SHIB)
Rodovia do Acucar (SP-075) Km 26
Itu, Sao Paulo, Brasil
TEL (55)11-4886-1000 FAX (55)11-4886-1000

Chile

SM-Cyclo de Chile Ltda. (SMCH)
Camino Lo Echevers 550, Bodegas 5 y 6,
Quilicura, Región Metropolitana, Chile
TEL (56)2-892-7000 FAX (56)2-892-7001

Argentina

SM-Cyclo de Argentina S.A. (SMAR)
Ing Delpini 2230, B1615KGB Grand Bourg,
Malvinas Argentinas, Buenos Aires, Argentina
TEL (54)3327-45-4095 FAX (54)3327-45-4099

Guatemala

SM Cyclo de Guatemala Ensambladora, Ltda. (SMGT)
Parque Industrial Unisur, 0 Calle B 19-50 Zona 3,
Bodega D-1 Delta Bárcenas en Villa Nueva, Guatemala
TEL (502)6648-0500 FAX (502)6631-9171

Colombia

SM Cyclo Colombia, S.A.S. (SMCO)
Parque Industrial Celta, Km 7.0 Autopista Medellín,
Costado Occidental, Funza, Cundinamarca, Colombia
TEL (57)1-300-0673

Peru

SM Cyclo de Perú, S.A.C (SMPE)
Jr. Monte Rosa 255, Oficina 702, Lima,
Santiago de Surco, Perú
TEL (51)1-713-0342 FAX (51)1-715-0223

Germany

Sumitomo (SHI) Cyclo Drive Germany GmbH (SCG)
Cyclostraße 92, 85229 Markt Indersdorf, Germany
TEL (49)8136-66-0 FAX (49)8136-5771

Austria

Sumitomo (SHI) Cyclo Drive Germany GmbH (SCG)
SCG Branch Austria Office
Gruentalerstraße 30A, 4020 Linz, Austria
TEL (43)732-330958 FAX (43)732-331978

Belgium

Hansen Industrial Transmissions NV (HIT)
Leonardo da Vincilaan 1, Edegem, Belgium
TEL (32)34-50-12-11 FAX (32)34-50-12-20

France

SM-Cyclo France SAS (SMFR)
8 Avenue Christian Doppler, 77700 Serris, France
TEL (33)164171717 FAX (33)164171718

Italy

SM-Cyclo Italy Srl (SMIT)
Via dell' Artigianato 23, 20010 Cornaredo (MI), Italy
TEL (39)293-481101 FAX (39)293-481103

Spain

SM-Cyclo Iberia, S.L.U. (SMIB)
C/Gran Vía Nº 63 Bis, Planta 1, Departamento 1B
48011 Bilbao–Vizcaya, Spain
TEL (34)9448-05389 FAX (34)9448-01550

United Kingdom

SM-Cyclo UK Ltd. (SMUK)
Unit 29, Bergen Way, Sutton Fields Industrial Estate,
Kingston upon Hull, HU7 0YQ, East Yorkshire,
United Kingdom
TEL (44)1482-790340 FAX (44)1482-790321

Turkey

SM Cyclo Turkey Güç Aktarım Sis. Tic. Ltd. Sti. (SMTR)
Barbaros Mh. Çiğdem Sk. Ağaoğlu, Office Mrk. No:1 Kat:4 D.18
Ataşehir, İstanbul, Turkey
TEL (90)216-250-6069 FAX (90)216-250-5556

India

Sumi-Cyclo Drive India Private Limited (SDI)
Gat No. 186, Raisoni Industrial Park, Alandi Markal Road,
Fulgaon-Pune, Maharashtra, India
TEL (91)96-0774-5353

China

Sumitomo (SHI) Cyclo Drive Shanghai, Ltd. (SCS)
11F, SMEG Plaza, No. 1386 Hongqiao Road,
Changning District, Shanghai, China 200336
TEL (86)21-3462-7877 FAX (86)21-3462-7922

Hong Kong

SM-Cyclo of Hong Kong Co., Ltd. (SMHK)
Room 19, 28th Floor, Metropole Square, No.2 On
Yiu Street, Shatin, New Territories, Hong Kong
TEL (852)2460-1881 FAX (852)2460-1882

Korea

Sumitomo (SHI) Cyclo Drive Korea, Ltd. (SCK)
Royal Bldg Room #913, 19, Saemunan-ro 5-gil,
Jongno-gu, Seoul, 03173, Korea
TEL (82)2-730-0151 FAX (82)2-730-0156

Taiwan

Tatung SM-Cyclo Co., Ltd. (TSC)
22 Chungshan N. Road 3rd., Sec. Taipei, Taiwan 104, R.O.C.
TEL (886)2-2595-7275 FAX (886)2-2595-5594

Singapore

Sumitomo (SHI) Cyclo Drive Asia Pacific Pte. Ltd. (SCA)
15 Kwong Min Road, Singapore 628718
TEL (65)6591-7800 FAX (65)6863-4238

Philippines

Sumitomo (SHI) Cyclo Drive Asia Pacific Pte. Ltd. Philippines Branch Office (SMPH)
C4 & C5 Buildings Granville Industrial Complex, Carmona,
Cavite 4116, Philippines
TEL (63)2-584-4921 FAX (63)2-584-4922

Vietnam

SM-Cyclo (Vietnam) Co., Ltd. (SMVN)
Factory 2B, Lot K1-2-5, Road No. 2-3-5A,
Le Minh Xuan Industrial Park, Binh Chanh Dist.,
HCMC, Vietnam
TEL (84)8-3766-3709 FAX (84)8-3766-3710

Malaysia

SM-Cyclo (Malaysia) Sdn. Bhd. (SMMA)
No.7C, Jalan Anggerik Mokara 31/56, Kota Kemuning,
Seksyen 31, 40460 Shah Alam, Selangor Darul Ehsan,
Malaysia
TEL (60)3-5121-0455 FAX (60)3-5121-0578

Indonesia

PT. SM-Cyclo Indonesia (SMID)
Jalan Sungkai Blok F 25 No. 09 K, Delta Silicon III,
Lippo Cikarang, Bekasi 17530, Indonesia
TEL (62)21-2961-2100 FAX (62)21-2961-2211

Thailand

SM-Cyclo (Thailand) Co., Ltd. (SMTH)
195 Empire Tower, Unit 2103-4, 21st Floor, South
Sathorn Road, Yannawa, Sathorn, Bangkok 10120,
Thailand
TEL (66)2670-0998 FAX (66)2670-0999

Australia

Sumitomo (SHI) Hansen Australia Pty. Ltd. (SHAU)
181 Power St, Glendenning, NSW 2761, Australia
TEL (61)2-9208-3000 FAX (61)2-9208-3050

Japan

Sumitomo Heavy Industries, Ltd. (SHI)
ThinkPark Tower, 1-1 Osaki 2-chome, Shinagawa-ku,
Tokyo 141-6025, Japan
TEL (81)3-6737-2511 FAX (81)3-6866-5160

Specifications, dimensions, and other items are subject to change without prior notice.

Sumitomo Heavy Industries, Ltd.

Power Transmission & Controls Group

Headquarter ThinkPark Tower, 1-1 Osaki 2-chome, Shinagawa-ku, Tokyo 141-6025, Japan

No.ZM2302E-10.2

EA15 Printed 2023.02